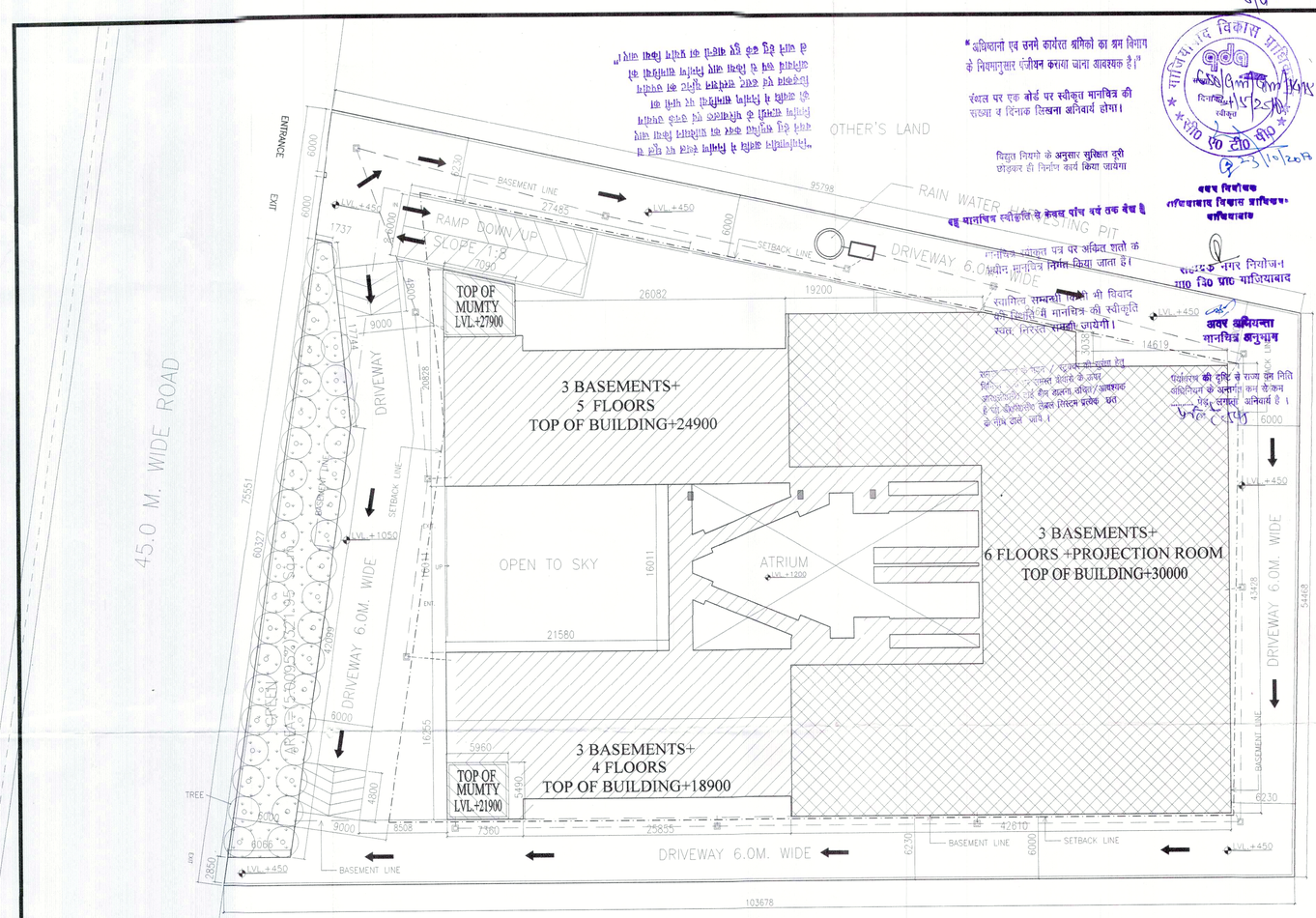

"अधिष्ठानों एवं उनमें कार्यरत श्रमिकों का श्रम विभाग के नियमानुसार पंजीयन कराया जाना आवश्यक है।"

संस्थल पर एक बोर्ड पर स्वीकृत मानचित्र की संख्या व दिनांक लिखना अनिवार्य होगा।

विद्युत नियमों के अनुसार सुरक्षित दूरी छोड़कर ही निर्माण कार्य किया जायेगा

"नगरपालिका अधिनियम के नियम 252 के अधीन यह मानचित्र स्वीकृति से केवल पांच वर्ष तक वैध है"

मानचित्र स्वीकृत पत्र पर अंकित शर्तों के अधीन मानचित्र निर्गत किया जाता है।

स्वामित्व सम्बन्धी किसी भी विवाद की स्थिति में मानचित्र की स्वीकृति स्वतः निरस्त समझी जायेगी।

पर्यावरण की दृष्टि से राज्य वन विभाग अधिनियम के अन्तर्गत कम से कम ___ पेड़ लगाना अनिवार्य है।

अवर अभियन्ता मानचित्र अनुभाग

नगर नियोजक ग0 वि0 प्रा0 गाजियाबाद

अवर विभागीय गाजियाबाद विकास प्राधिकरण गाजियाबाद

AREA CALCULATION CHART:-

S.NO.		PERMISSABLE (Sq.m.)	PROPOSED (Sq.m.)
1	TOTAL PURCHASED LAND	8,114.00	
2	LAND GONE INTO ROAD WIDENING	1,687.27	
3	PLOT AREA	6,426.73	
4	AREA REQUIRED FOR GREEN @ 5% OF (3)	321.33	=321.95Sq.m.(5.009%)
5	NET PLOT AREA FOR F.A.R. (3-4)	6,105.40	
6	DEFAULT F.A.R. 2.50 ON (5)	15,263.48	=15,263.48Sq.m.(2.5 F.A.R.)
7	PURCHASEBLE F.A.R. 50% OF 2.5 (5)=1.25 F.A.R.	7,631.74	=1,964.89Sq.m.
8	TOTAL F.A.R. (6+7)		=17,228.37 Sq.m.
9	PERMISSIBLE GROUND COVERAGE @45% OF (5)	2747.73	=2745.17Sq.m.(44.96%)
10	PERMISSIBLE ATRIUM @5% OF (5)	305.27	=304.80Sq.m.(44.92%)
11	(a) EQUIVALENT CAR-PARKING SPACE @2 CARS/100 Sq.m. OF COMMERCIAL AREA (17228.37-2511.63=14716.74)(8-13) (b) EQUIVALENT CAR-PARKING SPACE @ 1CAR/10 SEATS FOR CINEMA 962 SEATS	a=14716.74/100X2 =294.33 b=962/10=96.2 a+b=390.53 SAY=391 CARS	=437 CARS
12	TOTAL NON F.A.R. AREA		9,927.03 Sq.m.
13	AREA OF MULTIPLEX=1576.50+813.03+122.10		2511.63 Sq.m.

S.NO.		COMMERCIAL F.A.R. AREA(Sq.m.)	NON F.A.R. AREA(Sq.m.)
1.	THIRD BASEMENT	0.00	4532.66
2.	SECOND BASEMENT	0.00	4489.19
3.	FIRST BASEMENT FLOOR	3978.80	441.63
4.	GROUND FLOOR	2634.17	77.24
5.	FIRST FLOOR	2603.98	77.24
6.	SECOND FLOOR	2600.74	77.24
7.	THIRD FLOOR	2412.82	77.24
8.	FOURTH FLOOR	2062.73	81.67
9.	FIFTH FLOOR	813.03	47.05
10.	PROJECTION ROOM	122.10	25.87
11.	TOTAL AREA	17228.37	9927.03

TOTAL COVERD AREA:-

TOTAL F.A.R. AREA =17,228.37Sq.m.

TOTAL NON F.A.R. AREA= 9,927.03Sq.m.

TOTAL =27,155.40 Sq.m.

NOTES:-

1. ALL DIMENSIONS ARE IN MILLIMETER
2. ALL LEVELS ARE IN MILLIMETER
3. ALL THE AREAS INDICATED ARE IN SQ.METER.
4. COLUMNS ARE ONLY INDICATIVE AND WILL BE AS PER RELEVANT STRUCTURAL DRAWINGS.

PROPOSED SITE

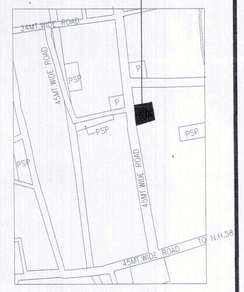

LOCATION PLAN

LEGEND:-

— — — RAIN WATER CARRYING PIPE LINE

RAIN WATER COLLECTION GULLY

GROUND COVERAGE:-

	SQ.M
A-DIAGRAM AREA	= 3133.97
DEDUCTIONS	
1-FIRE STAIRCASE	= 39.85
2-FIRE STAIRCASE	= 22.96
3-FIRE STAIRCASE	= 21.19
4-NOT USED	
5-ATRIUM	=220.38
6-ATRIUM	= 30.96
7-ATRIUM	= 30.96
8-ATRIUM	= 11.25
9-ATRIUM	= 11.25
TOTAL	=388.80
TOTAL GROUND COVERAGE AREA (3133.97-388.80)	=2745.17

ATRIUM AREA:-

5-ATRIUM	=220.38
6-ATRIUM	= 30.96
7-ATRIUM	= 30.96
8-ATRIUM	= 11.25
8-ATRIUM	= 11.25
TOTAL ATRIUM AREA	=304.80

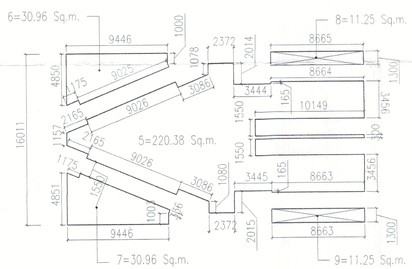

DIAGRAM FOR ATRIUM

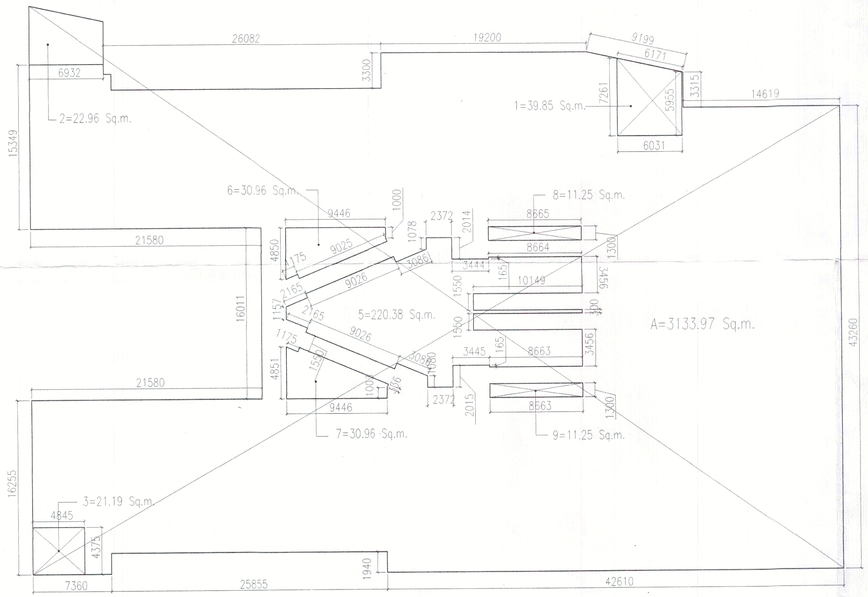

AREA DIAGRAM FOR GROUND COVERAGE

SUBMISSION DRAWING

OWER'S NAME
SPACETECH J.K.G. PROJECTS PRIVATE LIMITED
A UNIT OF JKG INFRABUILD PVT. LTD.
PLOT NO. 2, FIRST FLOOR TC JAINA COMPLEX
NETAJI SUBASH MARG DARYA GANJ, NEW DELHI-02

OWER'S SIGNATURE Director Mr. J.K.GOEL

ARCHITECT'S SIGNATURE Architect ANURAG GUPTA Registration No.CA/85/9138
ANURAG GUPTA B.ARCH. M.C.A.
Reg. No. CA/85/9138,
Architects And Interior Designer,
WZ-64, Shakarpur, Delhi-110092

PROJECT: PROPOSED MULTIPLEX AT KHASRA NO.1069, VILLAGE NOORNAGAR, PARGANA LONI, DISTT. GHAZIABAD (U.P.)

Architect
ANURAG GUPTA

VASTU SRIJAN
ARCHITECTS, ENGINEERS & PLANNERS
KB-34, EXPRESSION TOWER, SEC-14, KAUSHAMBI, GHAZIABAD
PHONE 011-66609610, email address :- vastusrijan@yahoo.co.in

DRAWN BY	Harbans	SCALE	1=250		Location
CHECKED BY	AG	DATE			JOB No. 1708
DRG.TITLE	SITE PLAN				DWG. No. 1608/101