Project Title :PROPOSED REVISED LAYOUT WITH MINOR CORRECTION AGAINST PREVIOUS SANCTION LAYOUT PERMIT NO. 2018081816272281O DATED- 07-03-2019 (GHAILA TOWNSHIP) Village: Ghaila & Alinagar, Lucknow for Shalimar KSMB Village Ghaila, Khasra No:- 2,3,4,5,6,7,12,13,14,23,24,25,27,31,32,87,88,89,89/1594,90Ka,91Ka,91Kha,91Ga,91Gha,92,93,94,95,96,97,108,110,114,115,115/1553,116,117,119Ka,120,121Ka,121Kha,122,123,124Ka,124Kha,181,182,183,184,191,192,195,195/1546,200,201,202,203,204,206,207,209,212,213,214,215,216,217,219,230,231,234,235,236,239,240Sa,Village Ali Nagar, Khasara No:- 5,23,25,26,27,29,35,36,37,39,41,45,46,48(PREVIOUS SANCTIONED PLOTTED RESI DEVELOPMENT / PLOTTED HOUSING/03660/LDA/LD/20-21/2742/29112021 DATED 11 MAR 2022)

DESCRIPTION

CHANGES MARKED

KEY PLAN
N.T.S.

UPDATED SANCTION LAYOUT PLAN

SITE PLAN
(Scale - 1:1500)

Project Title :

File No	LDA/D/20-21/627
Sanctioned Date	2022-06-17
File No	LDA/D/20-21/627
Sanctioned Date	2022-06-17
Shed	-
Scale	1:150

1.	AREA CLASSIFICATION	
	Project Type	Plotted Development
	Authority Name	Lucknow Development Authority
	Authority Date Category &	Plot Area Between Plotted Resi development (Plotted Resi development)
	Authority Date Development Authority (DA)	Residential Plot / Resi. Bazar Area
	Zone Type	Land Use Zone- Residential use Zone
	Project Type - Level Development	Land Subzone Zone- Residential Zone
	Nature of Development NEW	Layout Type NA
	Development Area	
	Development Area- Urban/Urban Area	
	Development Area- Village Area	
	Site Area as per	
	Site Address	
	District Lucknow Tehsil-Lucknow-Village-Ghaila	
	Area of Plot	Sq.Mts.
	Area of Plot (as per record)	
	Document Area	20,989.00
	Area of Plot Deduction	1547.17
	Area of Plot Considered	19417.05
	Deduction for	
	Road widening area	0.00
	Society open space	0.00
	Total (i + ii)	0.00
	Net Area of Plot (1.1) (-)Minus Of PLOT	19417.05
	Plot Area For Coverage	19417.05
	Plot Area For FAR	19417.05
	Total Plot Area (Sq.Mts.)	19417.05
	Total Plot - Excluding	0.00
	Total Area (Sq.Mts.)	0.00
	Permissible Coverage area %	0.00
	Proposed Coverage Area %	0.00
	Total Proj. Coverage Area (%)	0.00
	Balance coverage area (%)	0.00

	Proposed Built up	Existing Built up	Proposed F.A.R	Existing F.A.R
Total Area	0.00	0.00	0.00	0.00

Total FAR Area	0.00
Total Proposed FAR	0.00
Proposed F.A.R. deducted	0.00
Tenement Deposited	
Tenement Area (Sq.Mts.)	0.00

Land use analysis/Area Distribution (Table IV)

Area covered under	Proposed Area in sq.	Percentage(%)
Road Area	0.00	0.00
Plotted Area	19416.05	100.00
Other Area	436.00	0.00
Total site Area	19417.05	100.00

Individual Plot Area

Plot No.	Area Sq.mt	Plot Area		Frontage		Coverage		FSI Area	
		Reqd.	Provi.	Reqd.	Proj.	Reqd.	Proj.	Reqd.	Proj.
GROUP HOUSING 1	4408.- 2000.00	2000.00	1000.00	30.00	30.00	0.00	0.00	0.00	0.00

Accommodation Calculation

Plot Number	Use	Subuse	Range	No.	Perc. Unit Plot	Perc. Person	Total Person	Total
Group Housing								
GROUP HOUSING 1	Residential	Group Housing	Inner with Zone	1	200	5	200.00	200
Grand Total								200

Individual Plot Setback

Plot No.	Area Sq.mt	Setbacks Depth	Front		Side1		Side2		Rear		Coverage	FSI Area
			Reqd.	Proj.	Reqd.	Proj.	Reqd.	Proj.	Reqd.	Proj.	Proj.	Proj.
GROUP HOUSING 1	4408.- 2000.00	10.0 - 0.00	0.00	-	-	-	0.00	-	0.00	-	0.00	0.00

Tenement Density Check

Plot Number	As Per Tenements			As Per Persons		
density	Reqd	Perm	Prop	Reqd	Perm	Prop
1Density	-	50	-	-	250	200

Tree Details (Table 3h)

Plot	Name	Nos Of Trees	
		Reqd	Prop
10.0	Tree	-	0

Color Notes

COLOR INDEX	
PROPERTY BOUNDARY	
ABUTTING ROAD	
PROPOSED CONSTRUCTION	
ROAD WIDENING	
ROAD ALIGNMENT (ROAD WIDENING AREA)	
FUTURE T.P SCHEME DEDUCTION AREA	
EXISTING (To be retained)	
EXISTING (To be demolished)	

Total Plot Area :- 124117.05	Total FAR Area :- 0
Total Coverage Area :- 0	Total BUA Area :- 0

DWINER'S NAME AND SIGNATURE

SHALIMAR KSMB
PROJECT ARCHITECT(SHALIMAR ORL)7010188003

ARCHITECT'S NAME AND SIGNATURE SPECIFICATE ENGINEER

SAURABHE KUMAR
CA/2010/38998
Office address :
Flat No. 302, Ground Floor,
Gulab Vihar Apartment,
Gulab Vihar Colony,
Chinhat, Lucknow

Lucknow Development Authority

Building Plan Application Number
LDA/KZ/22-23/0277

Sanctioned On
14 Jul 2022

Valid Till
17 Jul 2027

Approved By
Vice Chairman (Vice Chairman)

Examined By
Rajesh Sharma (Junior engineer)
Shiv Kumar (Junior engineer)
Nagendra Singh (Assistant Engineer)
Bhupendra Veer Singh (Executive engineer)
Nitin Misal (Chief Town Planner)
Pawan kumar Gangwar (Secretary)

Note - 1) This drawing is prepared as per the current prevailing Building Bye Laws.
2) If Map sanctioned is used for purpose anything other than stated in application will lead to rejection of Map.

ISO_full_bleed_4A0_(1682.00_x_2378.00_MM)

The correctness and accuracy of Proposed Information and drawing is a responsibility of PO/Owner. Accuracy of Scrutiny Report is subject to accuracy of end-user provided data. 3rd party software/hardware/services, etc. SoftTech Engineers Ltd. is not liable for any damages which may arise from use, or inability to use the Application. Texts printed in Yellow and Blue color are user inputs, which are not verified and not generated by scrutiny software.

PLOT B

CLUSTER NAME	PLOT NO.	PLOT DIMENSION		PLOT AREA [sqmt]		SETBACK (MT.) FRONT	REAR	SIDE	SIDE
A	1	11.013m x 19.86m	1	217.85	217.85	3.0	3.0	3.0	-
	2	11.169m x 19.86m	1	201.53	201.53	3.0	3.0	3.0	-
	3	8.9m x 19.672m	1	176.79	176.79	3.0	3.0	-	-
	4	8.9m x 19.632m	1	174.92	174.92	3.0	3.0	-	-
	5	8.680m x 19.383m	1	168.24	168.2444	3.0	3.0	3.0	-
			5		0				
B	1	11.465m x 14.394m	1	170.66	170.66	3.0	3.0	3.0	-
	2	11.610m x 14.394m	1	154.93	154.93	3.0	3.0	-	-
	3	9.976m x 23.136m	1	230.82	230.82	3.0	3.0	3.0	-
	4	9m x 22.672m	1	206.79	206.79	3.0	3.0	-	-
	5	9m x 22.063m	1	202.6	202.6	3.0	3.0	-	-
	6	9m x 21.453m	1	195.82	195.82	3.0	3.0	-	-
	7	9m x 20.843m	1	190.33	190.33	3.0	3.0	-	
	8	9m x 20.234m	1	184.85	184.85	3.0	3.0	-	
	9	9m x 19.624m	1	179.36	179.36	3.0	3.0	-	
	10-17	8.3m x 18m	8	149.4	1195.2	3.0	3.0	-	-
	18	7.825m x 18m	1	157.3	157.3	3.0	3.0	3.0	-
			18		0				
C	1	12.06+10.44/2X12.50	1	140.62	140.62	2.0	2.0	2.0	-
	2	7.65m x 12.50m	1	95.62	95.62	2.0	2.0	-	-
	3	7.65m x 12.50m	1	95.62	95.62	2.0	2.0	-	-
	4A,4B	7.65M x 12.50m	2	95.62	191.24	2.0	2.0		
	5-7	9.9m x 20.5m	3	202.95	608.85	3.0	3.0	-	-
	8	9.493m x 19.716m	1	181.6	181.6	3.0	3.0	3.0	-
	9	10.195m x 18.764m	1	168.81	168.81	3.0	3.0	-	-
	10	10.5m x 17.799m	1	181.64	181.64	3.0	3.0	-	-
	11	10.5m x 16.8m	1	176.35	176.35	3.0	3.0	-	-
	12-14	8.850m x 16.8m	3	148.68	446.04	3.0	3.0	-	-
	15	11.5m x 16.8m	1	181.06	181.06	3.0	3.0	3.0	-
			16		0				
D	1	13.0m x 17.5m	1	174.73	174.73	3.0	3.0	3.0	-
	2	10m x 17.5m	1	109.92	109.92	3.0	3.0	-	-
	3-8	8.765m x 13.120m	6	115	690	3.0	3.0	-	-
	9	8.765m x 13.120m	1	115	115	3.0	3.0	3.0	-
			9		0				
E	1	8.78m x 14.23m	1	125	125	2.0	2.0	2.0	-
	2-3	8.08m x 14.23m	2	115	230	2.0	2.0	-	-
	4	11.46m x 16.86m	1	149.49	149.49	2.0	2.0	2.0	-
	5	8.5m x 16.86m	1	143.31	143.31	2.0	2.0	-	-
	6	8.5m x 16.86m	1	143.31	143.31	2.0	2.0	2.0	-
	7-8	8.08m x 14.23m	2	115	230	2.0	2.0	-	-
	9	8.78m x 14.23m	1	125	125	2.0	2.0	2.0	-
			9		0				
F	1	8.78m x 14.23m	1	125	125	2.0	2.0	2.0	-
	2-4	8.08m x 14.23m	3	115	345	2.0	2.0	-	-
	5-6	8.78m x 14.23m	2	125	250	2.0	2.0	2.0	-
	7-9	8.08m x 14.23m	3	115	345	2.0	2.0	-	-
	10	8.78m x 14.23m	1	125	125	2.0	2.0	2.0	-
			10		0				
G	1	8.78m x 14.23m	1	125	125	2.0	2.0	2.0	-
	2-4	8.08m x 14.23m	3	115	345	2.0	2.0	-	-
	5-6	8.78m x 14.23m	2	125	250	2.0	2.0	2.0	-
	7-9	8.08m x 14.23m	3	115	345	2.0	2.0	-	-
	10	8.78m x 14.23m	1	125	125	2.0	2.0	2.0	-
			10		0				
H	1	8.78m x 14.23m	1	125	125	2.0	2.0	2.0	-
	2-4	8.08m x 14.23m	3	115	345	2.0	2.0	-	-
	5-6	8.78m x 14.23m	2	125	250	2.0	2.0	2.0	-
	7-9	8.08m x 14.23m	3	115	345	2.0	2.0	-	-
	10	8.78m x 14.23m	1	125	125	2.0	2.0	2.0	-
			10		0				
I	1	8.78m x 18.125m	1	159.14	159.14	3.0	3.0	3.0	-
	2-4	8.08m x 18.125m	3	146.45	439.35	3.0	3.0	-	-
	5-6	8.78m x 18.125m	2	159.14	318.28	3.0	3.0	3.0	-
	7-9	8.08m x 18.125m	3	146.45	439.35	3.0	3.0	-	-
	10	8.78m x 18.125m	1	159.14	159.14	3.0	3.0	3.0	-
			10		0				
J	1	16m X 8.567m	1	155.27	155.27	3.0	3.0	3.0	-
	2	10m X 11.021m	1	119	119	3.0	3.0	-	-
	3	10m X 12.737m	1	135.65	135.65	3.0	3.0	-	-
	4	10m X 14.392m	1	152.19	152.19	3.0	3.0	-	-
	5	10m X 16.046m	1	168.22	168.22	3.0	3.0	-	-
	6	10m X 17.54m	1	181.1	181.1	3.0	3.0	-	-
	7	10m X 18.596m	1	190.26	190.26	3.0	3.0	-	-
	8	11.538m X 19.394m	1	249.41	249.41	3.0	3.0	3.0	-
			8		0				
K	1	13m x 11.175m	1	133.95	133.95	3.0	3.0	3.0	-
	2	10m x 11.059m	1	111.17	111.17	3.0	3.0	-	-
	3	10m x 11.085m	1	110.43	110.43	3.0	3.0	-	-
	4	10m x 11.210m	1	111.47	111.47	3.0	3.0	-	-
	5	8.75m x 12.381m	1	117.13	117.13	3.0	3.0	-	-
	6	8.75m x 14.397m	1	116.91	116.91	3.0	3.0	-	-
	7	8.75m x 16.35m	1	134.93	134.93	3.0	3.0	-	-
	8	8.75m x 17.897m	1	149.83	149.83	3.0	3.0	-	-
	9	8.75m x 19.283m	1	162.66	162.66	3.0	3.0	-	-
	10	8.75m x 20.665m	1	174.77	174.77	3.0	3.0	-	-
	11	8.75m x 21.685m	1	185.6	185.6	3.0	3.0	-	-
	12	8.75m x 22.560m	1	193.72	193.72	3.0	3.0	-	-
	13	8.75m x 23.342m	1	200.82	200.82	3.0	3.0	-	-
	14	11.884m x 23.342m	1	280.35	280.35	3.0	3.0	3.0	-
			14						
L	1	15.00m x 10.45m	1	156.75	156.75	3.0	3.0	3.0	-
	2	11.50m x 13.16m	1	151.34	151.34	3.0	3.0	0.0	-
	3	11.50m x 15.20m	1	174.8	174.8	3.0	3.0	0.0	-
	4	11.50m x 17.43m	1	200.44	200.44	3.0	3.0	0.0	-
	5	10..80 m x 19.88 m	1	214.7	214.7	3.0	3.0	3.0	-
	6-9	7.65m X 14.5 m	4	110.92	443.68	2.0	2.0	-	-
	10	10.810+8.43/2x14.50	1	139.49	139.49	2.0	2.0	2.0	-
			10						
			129		18812.5				

ORCHIDS PLOTS

ORCHIDS PLOT EXTENSION
15 PLOTS
2004.35 SQ.MT.

ORCHIDS PLOTS

PLOT A- ALPHA SECTOR

CLUSTER	PLOT NO.	PLOT DIMENSION	PLOT AREA	SETBACK (MT.) FRONT	REAR	SIDE	SIDE
A	1	12m x 20m	240	3.0	3.0	3.0	-
	2	9m x 20m	180	3.0	3.0	-	-
	3	12m x 20m	240	3.0	3.0	3.0	-
B	1	12m x 20m	240	3.0	3.0	3.0	-
	2-4	9m x 20m	180	3.0	3.0	-	-
	5-6	12m x 20m	240	3.0	3.0	3.0	
	7-8	9m x 20m	180	3.0	3.0	-	
	9	12m x 20m	240	3.0	3.0	3.0	-
C	1	12m x 20m	240	3.0	3.0	3.0	-
	2-6	9m x 20m	180	3.0	3.0	-	-
	7	12m x 20m	240	3.0	3.0	3.0	-
D	1	12m x 20m	240.00	3.0	3.0	3.0	-
	2-6	9m x 20m	180.00	3.0	3.0	-	-
	7A,7B,7C,7D	8.32m x 16.5m	137.28	2.0	2.0	-	-
	8-10	8.575m x 16.5m	141.49	2.0	2.0	-	
E	1	12m x 20m	240	3.0	3.0	3.0	-
	2-5	9m x 20m	180	3.0	3.0	-	
	6-7	12m x 20m	240	3.0	3.0	3.0	-
	8-11	9m x 20m	180	3.0	3.0	-	-
	12	12m x 20m	240	3.0	3.0	3.0	
F	1	12m x 20m	240	3.0	3.0	3.0	-
	2-5	9m x 20m	180	3.0	3.0	-	-
	6-7	12m x 20m	240	3.0	3.0	3.0	-
	8-11	9m x 20m	180	3.0	3.0	-	-
	12	12m x 20m	240	3.0	3.0	3.0	-
G	1	12m x 20m	240	3.0	3.0	3.0	-
	2	9m x 20m	180	3.0	3.0	-	-
	3	12m x 20m	240	3.0	3.0	3.0	-
H	1	12m x 20m	240	3.0	3.0	3.0	-
	2-3	9m x 20m	180	3.0	3.0	-	-
	4	12m x 20m	240	3.0	3.0	3.0	-
J	1	11.575m x 16.5m	191	2.0	2.0	2.0	-
	2	8.575m x 16.5m	141	2.0	2.0	-	-
	3	11.575m x 16.5m	191	2.0	2.0	2.0	-
J1	1	10.5m x 14m	147	2.0	2.0	2.0	-
	2	10.5m x 14m	147	2.0	2.0	2.0	-
K	1	11.575m x 16.5m	191	2.0	2.0	2.0	-
	2-7	8.575m x 16.5m	141	2.0	2.0	-	-
	8-12	8.575m x 16.5m	141	2.0	2.0	-	-
	13	11.575m x 16.5m	191	2.0	2.0	2.0	-
	14-18	8.575m x 16.5m	141	2.0	2.0	-	-
	19	11.575m x 16.5m	191	2.0	2.0	2.0	
L	1	11.575m x 16.5m	191	2.0	2.0	2.0	-
	2-7	8.575m x 16.5m	141	2.0	2.0	-	-
	8-12	8.575m x 16.5m	141	2.0	2.0	-	-
	13-14	11.575m x 16.5m	191	2.0	2.0	2.0	-
	15-21	8.575m x 16.5m	141	2.0	2.0	-	-
	22-25	8.575m x 16.5m	141	2.0	2.0	-	-
	26	11.575m x 16.5m	191	2.0	2.0	2.0	-
M	1	10.5m x 14.0m	147	2.0	2.0	2.0	-
	2-5	8.5m x 14m	119	2.0	2.0	-	-
	6-8	8.5m x 14m	119	2.0	2.0	-	-
	9	10.5m x 14.0m	147	2.0	2.0	2.0	-
	10	16m x 10.5m	168	2.0	2.0		
	11-14	8.5m x 14m	119	2.0	2.0	-	-
	15	10.5m x 14.0m	147	2.0	2.0	2.0	-
N	1	10.5m x 14.0m	147	2.0	2.0	2.0	-
	2-5	8.5m x 14m	119	2.0	2.0	-	-
	6-8	8.5m x 14m	119	2.0	2.0	-	-
	9-10	10.5m x 14.0m	147	2.0	2.0	2.0	-
	11-15	8.5m x 14m	119	2.0	2.0	-	-
	16-17	8.5m x 14m	119	2.0	2.0	-	-
	18	10.5m x 14.0m	147	2.0	2.0	2.0	-
P	1	10.5m x 14.0m	147	2.0	2.0	2.0	-
	2-6	8.5m x 14m	119	2.0	2.0	-	-
	7-9	8.5m x 14m	119	2.0	2.0	-	-
	10	10.5m x 14.0m	147	2.0	2.0	2.0	-
TOTAL PLOTS - 156 NO.							

SITE AREA PROGRAM

DESCRIPTION	AREA DISTRIBUTION (SQ. MT.)	(ACRE)	TOTAL (ACRES)	PERCENTAGE	
SITE AREA	313955.4		77.58		
GOOL AREA	12810.00	3.17			
CHAK ROAD	3707.52	0.92			
KUCHHI NAALI AREA	5032.47	1.24			
TOTAL UNUSED AREA			5.33		
TOTAL SITE AREA	292405.41		72.25		
LAND LEFT FOR ROAD WIDENING(51.9M)	2927.73	0.72			
GREEN BELT (50M)	9452.41	2.34			
GREEN BELT (100M)	14897.67	3.68			
TOTAL LAND FOR ROAD WIDENING AND GREEN BELT	27277.81		6.74		
NET SITE AREA	265127.60		65.51		
GREEN AND PARK AREAS	40550.61	10.02		15.29%	
TOTAL AREA FOR ROW HOUSES/ VILLAS	99477.30	24.58		37.52%	
GROUP HOUSING PLOT	39426.38	9.74		14.87%	
GROUP HOUSING 2	10336.12	2.55		3.90%	
TOTAL AREA FOR RESIDENTIAL	149239.80		36.88		56.29%
L.I.G./L.I.G GOUSING PLOT	9311.00	2.30		3.51%	
SCHOOL+ AGANWADI	4341.00	1.07		1.64%	
NURSERY SCHOOL	521.62	0.13		0.20%	
COMMUNITY CENTER	4924.16	1.22		1.86%	
CONVENIENCE SHOPPING	2076.85	0.51		0.71%	
SUB-POST OFFICE	110.40	0.03		0.04%	
HEALTH CARE CENTER	827.47	0.20		0.31%	
GARBAGE DISPOSAL	90.00	0.02		0.03%	
11KVA ELECTRIC SUBSTATION	501.78	0.12		0.19%	
CHABUTRA	45.00	0.01		0.02%	
TOTAL AREA FOR ROADS	52587.91	12.99		19.83%	
		77.58		100%	

TABLE OF IMPACTED AREA FOR CHARGES

DESCRIPTION	AREA	NO OF PLOTS	TOTAL AREA
GROUP HOUSING -2	10336.12	1	10336.12
Added Plot			
Plot A Alpha Sector			
7a.7b,7c,7d	137.28	4	549.12
Plot B			
Block L			
Plot 01	156.75	1	156.75
Plot 02	151.34	1	151.34
Plot 06-09	110.92	4	443.68
Plot 10	139.49	1	139.49
Block C			
Plot 2,3,4a,4b	95.62	4	382.48
Plot 01	140.62	1	140.62
School & Aaganbadi	4341.00	1	4341
		18	16640.6

REVISED PLOT DISTRIBUTION AND POPULATION PROJECTION

AREA(SQ. MT.)	NO. OF PLOTS	PERMISSIBLE NO. OF UNITS	PERSON /UNIT	POPULATION	
0-100	143	143			
101-150	298	298			
151-200	165	165			
201-250	86	86			
251-300	5	5			
301-500	0	0			
TOTAL	697	697	5	3485	
GROUP HOUSING	1	302	5	1510	
Ghroup Housing 2	1	220	5	1100	
		1219			
L.I.G. HOUSING		122	5	610	
E.W.S. HOUSING		122	5	610	
	TOTAL POPULATION			7315	

THIRD SANCTION AREA

OWNER'S NAME AND SIGNATURE
SHALIMAR KSMB
PROJECT.ARCHITECT@SHALIMAR.ORG,7310106603

ARCH/ENG'S NAME AND SIGNATURE | STRUCTURE ENGINEER
SADANAND KUMAR
CA/2013/58886

Lucknow Development Authority

Building Plan Application Number
LDA/LD/22-23/0277
Sanctioned On
14 Jul 2022
Valid Till
17 Jul 2027
Approved By
Vice Chairman (Vice Chairman)
Examined By
Rajesh Sharma (Junior engineer)
Shiv Kumar (Junior engineer)
Nagendra Singh (Assistant Engineer)
Bhupendra Veer Singh (Executive engineer)
Nitin Mital (Chief Town Planner)
Pawan kumar Gangwar (Secretary)

Total Plot Area: - 12417.05 | Total FAR Area: - .0
Total Coverage Area: - .0 | Total BUA Area: - .0

Note: - 1) This drawing is prepared as per the current prevailing Building Bye Laws.
2) If Map sanctioned is used for purpose anything other than stated in application will lead to rejection of Map.

The correctness and accuracy of Proposal Information and drawing is a responsibility of POR/owner. Accuracy of Scrutiny Report is subject to accuracy of end-user provided data, 3rd party software/hardware/services, etc. SoftTech Engineers Ltd. is not liable for any damages which may arise from use, or inability to use the Application. Texts printed in 'Italics' and 'Blue' color are user inputs, which are not verified and not generated by scrutiny software.

PLOT - C

CLUSTER	PLOT NO.	PLOT	PLOT AREA	SETBACK (MT.) FRONT	REAR	SIDE	SIDE
A	1	11.6m x 18m	208.80	3.0	3.0	3.0	-
	2-3	8.575m x 18m	154.35	3.0	3.0	-	-
	4-6	11.6m x 18m	208.80	3.0	3.0	3.0	-
B	1	11.6m x 18m	208.80	3.0	3.0	3.0	-
	2-4	8.575m x 18m	154.35	3.0	3.0	-	-
	5	11.6m x 18m	208.80	3.0	3.0	3.0	-
C	1	11.6m x 18m	208.80	3.0	3.0	3.0	-
	2-8	8.575m x 18m	154.35	3.0	3.0	-	-
	9-10	11.6m x 18m	208.80	3.0	3.0	3.0	-
	11-17	8.575m x 18m	154.35	3.0	3.0	-	-
	18	11.6m x 18m	208.80	3.0	3.0	3.0	-
D	1	11.6m x 18m	208.80	3.0	3.0	3.0	-
	2-11	8.575m x 18m	154.35	3.0	3.0	-	-
	12	11.6m x 18m	208.80	3.0	3.0	3.0	-
E	1	11.6m x 18m	208.80	3.0	3.0	3.0	-
	2-3	8.575m x 18m	154.35	3.0	3.0		
	4	11m x 11.88m	130.68	2.0	2.0		
	5	11m x 11.88m	130.68	2.0	2.0		
F	1	11.6m x 18m	208.80	3.0	3.0	3.0	-
	2-4	8.575m x 18m	154.35	3.0	3.0	-	
	5-6	11.6m x 18m	208.80	3.0	3.0	3.0	-
	7-14	8.575m x 18m	154.35	3.0	3.0	3.0	-
G	1	11.6m x 18m	208.80	3.0	3.0	3.0	
	2-4	8.575m x 18m	154.35	3.0	3.0		
	5	11.6m x 18m	208.80	3.0	3.0		
	6	15m x 10.5m	157.05	3.0			
H	1	11.6m x 18m	208.80	3.0	3.0	3.0	-
	2-4	8.575m x 18m	154.35	3.0	3.0	-	-
	5	11.6m x 18m	208.80	3.0	3.0	-	-
	6	15m x 11.5m	172.50	3.0			
TOTAL PLOTS - 72 NO.							

IRIS EXTENSION
02 PLOTS
AREA-261.36
SQ.MT

IRIS

PLOT A- ALPHA SECTOR

CLUSTER	PLOT NO.	PLOT	PLOT AREA	SETBACK (MT.) FRONT	REAR	SIDE	SIDE
A	1	12m x 20m	240	3.0	3.0	3.0	-
	2	9m x 20m	180	3.0	3.0	-	-
	3	12m x 20m	240	3.0	3.0	3.0	-
B	1	12m x 20m	240	3.0	3.0	3.0	-
	2-4	9m x 20m	180	3.0	3.0	-	-
	5-6	12m x 20m	240	3.0	3.0	3.0	
	7-8	9m x 20m	180	3.0	3.0	-	
	9	12m x 20m	240	3.0	3.0	3.0	-
C	1	12m x 20m	240	3.0	3.0	3.0	-
	2-6	9m x 20m	180	3.0	3.0	-	-
	7	12m x 20m	240	3.0	3.0	3.0	-
D	1	12m x 20m	240	3.0	3.0	3.0	-
	2-6	9m x 20m	180	3.0	3.0	-	-
	7	12m x 20m	240	3.0	3.0	3.0	-
	8-10	8.575m x 16.5m	141.49	3.0	3.0	-	
E	1	12m x 20m	240	3.0	3.0	3.0	-
	2-5	9m x 20m	180	3.0	3.0	-	
	6-7	12m x 20m	240	3.0	3.0	3.0	-
	8-11	9m x 20m	180	3.0	3.0	-	-
	12	12m x 20m	240	3.0	3.0	3.0	
F	1	12m x 20m	240	3.0	3.0	3.0	-
	2-5	9m x 20m	180	3.0	3.0	-	-
	6-7	12m x 20m	240	3.0	3.0	3.0	-
	8-11	9m x 20m	180	3.0	3.0	-	-
	12	12m x 20m	240	3.0	3.0	3.0	-
G	1	12m x 20m	240	3.0	3.0	3.0	-
	2	9m x 20m	180	3.0	3.0	-	-
	3	12m x 20m	240	3.0	3.0	3.0	-
H	1	12m x 20m	240	3.0	3.0	3.0	-
	2-3	9m x 20m	180	3.0	3.0	-	-
	4	12m x 20m	240	3.0	3.0	3.0	-
J	1	11.575m x 16.5m	191	2.0	2.0	2.0	-
	2	8.575m x 16.5m	141	2.0	2.0	-	-
	3	11.575m x 16.5m	191	2.0	2.0	2.0	-
J1	1	10.5m x 14m	147	2.0	2.0	2.0	-
	2	10.5m x 14m	147	2.0	2.0	2.0	-
K	1	11.575m x 16.5m	191	2.0	2.0	2.0	-
	2-7	8.575m x 16.5m	141	2.0	2.0	-	-
	8-12	8.575m x 16.5m	141	2.0	2.0	-	-
	13	11.575m x 16.5m	191	2.0	2.0	2.0	-
	14-18	8.575m x 16.5m	141	2.0	2.0	-	-
	19	11.575m x 16.5m	191	2.0	2.0	2.0	
L	1	11.575m x 16.5m	191	2.0	2.0	2.0	-
	2-7	8.575m x 16.5m	141	2.0	2.0	-	-
	8-12	8.575m x 16.5m	141	2.0	2.0	-	-
	13-14	11.575m x 16.5m	191	2.0	2.0	2.0	-
	15-21	8.575m x 16.5m	141	2.0	2.0	-	-
	22-25	8.575m x 16.5m	141	2.0	2.0	-	-
	26	11.575m x 16.5m	191	2.0	2.0	2.0	-
M	1	10.5m x 14.0m	147	2.0	2.0	2.0	-
	2-5	8.5m x 14m	119	2.0	2.0	-	-
	6-8	8.5m x 14m	119	2.0	2.0	-	-
	9	10.5m x 14.0m	147	2.0	2.0	2.0	-
	10	16m x 10.5m	168	2.0	2.0		
	11-14	8.5m x 14m	119	2.0	2.0	-	-
	15	10.5m x 14.0m	147	2.0	2.0	2.0	-
N	1	10.5m x 14.0m	147	2.0	2.0	2.0	-
	2-5	8.5m x 14m	119	2.0	2.0	-	-
	6-8	8.5m x 14m	119	2.0	2.0	-	-
	9-10	10.5m x 14.0m	147	2.0	2.0	2.0	-
	11-15	8.5m x 14m	119	2.0	2.0	-	-
	16-17	8.5m x 14m	119	2.0	2.0	-	-
	18	10.5m x 14.0m	147	2.0	2.0	2.0	-
P	1	10.5m x 14.0m	147	2.0	2.0	2.0	-
	2-6	8.5m x 14m	119	2.0	2.0	-	-
	7-9	8.5m x 14m	119	2.0	2.0	-	-
	10	10.5m x 14.0m	147	2.0	2.0	2.0	-
TOTAL PLOTS - 153 NO.							

ORCHIDS PLOTS

PLOT B

CLUSTER NAME	PLOT NO.	PLOT DIMENSION		PLOT AREA [sqmt]		SETBACK (MT.) FRONT	REAR	SIDE	SIDE
A	1	11.013m x 19.86m	1	217.85	217.85	3.0	3.0	3.0	-
	2	11.169m x 19.86m	1	201.53	201.53	3.0	3.0	3.0	-
	3	8.9m x 19.672m	1	176.79	176.79	3.0	3.0	-	-
	4	8.9m x 19.632m	1	174.92	174.92	3.0	3.0	-	-
	5	8.680m x 19.383m	1	168.24	168.2444	3.0	3.0	3.0	-
			5		0				
B	1	11.465m x 14.394m	1	170.66	170.66	3.0	3.0	3.0	-
	2	11.610m x 14.394m	1	154.93	154.93	3.0	3.0	-	-
	3	9.976m x 23.136m	1	230.82	230.82	3.0	3.0	3.0	-
	4	9m x 22.672m	1	206.79	206.79	3.0	3.0	-	-
	5	9m x 22.063m	1	202.6	202.6	3.0	3.0	-	-
	6	9m x 21.453m	1	195.82	195.82	3.0	3.0	-	-
	7	9m x 20.843m	1	190.33	190.33	3.0	3.0	-	
	8	9m x 20.234m	1	184.85	184.85	3.0	3.0	-	
	9	9m x 19.624m	1	179.36	179.36	3.0	3.0	-	
	10-17	8.3m x 18m	8	149.4	1195.2	3.0	3.0	-	-
	18	7.825m x 18m	1	157.3	157.3	3.0	3.0	3.0	-
			18		0				
C	1	13.481m x 14.288m	1	212.12	212.12	3.0	3.0	3.0	-
	2	11.5m x 16.319m	1	203.08	203.08	3.0	3.0	-	-
	3	9.9m x 18.99m	1	199.52	199.52	3.0	3.0	-	-
	4-7	9.9m x 20.5m	4	202.95	811.8	3.0	3.0	-	-
	8	9.493m x 19.716m	1	181.6	181.6	3.0	3.0	3.0	-
	9	10.195m x 18.764m	1	168.81	168.81	3.0	3.0	-	-
	10	10.5m x 17.799m	1	181.64	181.64	3.0	3.0	-	-
	11	10.5m x 16.8m	1	176.35	176.35	3.0	3.0	-	-
	12-14	8.850m x 16.8m	3	148.68	446.04	3.0	3.0	-	-
	15	11.5m x 16.8m	1	181.06	181.06	3.0	3.0	3.0	-
			15		0				
D	1	13.0m x 17.5m	1	174.73	174.73	3.0	3.0	3.0	-
	2	10m x 17.5m	1	109.92	109.92	3.0	3.0	-	-
	3-8	8.765m x 13.120m	6	115	690	3.0	3.0	-	-
	9	8.765m x 13.120m	1	115	115	3.0	3.0	3.0	-
			9		0				
E	1	8.78m x 14.23m	1	125	125	2.0	2.0	2.0	-
	2-3	8.08m x 14.23m	2	115	230	2.0	2.0	-	-
	4	11.46m x 16.86m	1	149.49	149.49	2.0	2.0	2.0	-
	5	8.5m x 16.86m	1	143.31	143.31	2.0	2.0	-	-
	6	8.5m x 16.86m	1	143.31	143.31	2.0	2.0	2.0	-
	7-8	8.08m x 14.23m	2	115	230	2.0	2.0	-	-
	9	8.78m x 14.23m	1	125	125	2.0	2.0	2.0	-
			9		0				
F	1	8.78m x 14.23m	1	125	125	2.0	2.0	2.0	-
	2-4	8.08m x 14.23m	3	115	345	2.0	2.0	-	-
	5-6	8.78m x 14.23m	2	125	250	2.0	2.0	2.0	-
	7-9	8.08m x 14.23m	3	115	345	2.0	2.0	-	-
	10	8.78m x 14.23m	1	125	125	2.0	2.0	2.0	-
			10		0				
G	1	8.78m x 14.23m	1	125	125	2.0	2.0	2.0	-
	2-4	8.08m x 14.23m	3	115	345	2.0	2.0	-	-
	5-6	8.78m x 14.23m	2	125	250	2.0	2.0	2.0	-
	7-9	8.08m x 14.23m	3	115	345	2.0	2.0	-	-
	10	8.78m x 14.23m	1	125	125	2.0	2.0	2.0	-
			10		0				
H	1	8.78m x 14.23m	1	125	125	2.0	2.0	2.0	-
	2-4	8.08m x 14.23m	3	115	345	2.0	2.0	-	-
	5-6	8.78m x 14.23m	2	125	250	2.0	2.0	2.0	-
	7-9	8.08m x 14.23m	3	115	345	2.0	2.0	-	-
	10	8.78m x 14.23m	1	125	125	2.0	2.0	2.0	-
			10		0				
I	1	8.78m x 18.125m	1	159.14	159.14	3.0	3.0	3.0	-
	2-4	8.08m x 18.125m	3	146.45	439.35	3.0	3.0	-	-
	5-6	8.78m x 18.125m	2	159.14	318.28	3.0	3.0	3.0	-
	7-9	8.08m x 18.125m	3	146.45	439.35	3.0	3.0	-	-
	10	8.78m x 18.125m	1	159.14	159.14	3.0	3.0	3.0	-
			10		0				
J	1	16m X 8.567m	1	155.27	155.27	3.0	3.0	3.0	-
	2	10m X 11.021m	1	119	119	3.0	3.0	-	-
	3	10m X 12.737m	1	135.65	135.65	3.0	3.0	-	-
	4	10m X 14.392m	1	152.19	152.19	3.0	3.0	-	-
	5	10m X 16.046m	1	168.22	168.22	3.0	3.0	-	-
	6	10m X 17.54m	1	181.1	181.1	3.0	3.0	-	-
	7	10m X 18.596m	1	190.26	190.26	3.0	3.0	-	-
	8	11.538m X 19.394m	1	249.41	249.41	3.0	3.0	3.0	-
			8		0				
K	1	13m x 11.175m	1	133.95	133.95	3.0	3.0	3.0	-
	2	10m x 11.059m	1	111.17	111.17	3.0	3.0	-	-
	3	10m x 11.085m	1	110.43	110.43	3.0	3.0	-	-
	4	10m x 11.210m	1	111.47	111.47	3.0	3.0	-	-
	5	8.75m x 12.381m	1	117.13	117.13	3.0	3.0	-	-
	6	8.75m x 14.397m	1	116.91	116.91	3.0	3.0	-	-
	7	8.75m x 16.35m	1	134.93	134.93	3.0	3.0	-	-
	8	8.75m x 17.897m	1	149.83	149.83	3.0	3.0	-	-
	9	8.75m x 19.283m	1	162.66	162.66	3.0	3.0	-	-
	10	8.75m x 20.665m	1	174.77	174.77	3.0	3.0	-	-
	11	8.75m x 21.685m	1	185.6	185.6	3.0	3.0	-	-
	12	8.75m x 22.560m	1	193.72	193.72	3.0	3.0	-	-
	13	8.75m x 23.342m	1	200.82	200.82	3.0	3.0	-	-
	14	11.884m x 23.342m	1	280.35	280.35	3.0	3.0	3.0	-
			118		17625.87				

PLOT DETAIL UNDER REVISION (BLOW UP DETAIL)

PLOT-A BETA SECTOR							
BLOCK-J							
		Mt.	Mt.	SQM.	F.S.B.	R.S.B.	S.S.B.
	1	(8.50 X18.0)-(4.35X2.35/2)		147.89	3	3	
	2	8.5	18	153	3	3	
	3	8.5	18	153	3	3	
	4	8.5	18	153	3	3	
	5	(8.50 X18.0)-(1.72X3.02/2)		150.4	3	3	
BLOCK-Q							
	1	8.5	18	153	3	3	
	2	8.5	18	153	3	3	
	3	8.5	18	152.9	3	3	
BLOCK-N	SET BACK CORRECTION						
	1	(15.26+14.27)/2X10.0		147.65	2	2	
	2	(14.27+13.43)/2X8.0		110.8	2	2	
	3	(13.43+11.889)/2X9.91		125.46	2	2	
PLOT-C SUB DIVISION							
BLOCK-E							
	4	11	11.88	130.68	2	2	
	5	11	11.88	130.68	2	2	
PLOT -A ALPHA SECTOR SET BACK CORRECTION							
BLOCK-J							
	1	11.575	16.5	191	3	3	3
	2	8.575	16.5	141	3	3	
	3	11.575	16.5	191	3	3	3
BLOCK-K							
	1	11.575	16.5	191	2	2	2
	2-7	8.575	16.5	141	2	2	
	8-12	8.575	16.5	141	2	2	
	13	11.575	16.5	191	2	2	2
	14-18	8.575	16.5	141	2	2	
	19	11.575	16.5	191	2	2	2
BLOCK-L							
	1	11.575	16.5	191	2	2	2
	2-7	8.575	16.5	141	2	2	
	8-12	8.575	16.5	141	2	2	
	13-14	11.575	16.5	191	2	2	
	15-21	8.575	16.5	141	2	2	
	22-25	8.575	16.5	141	2	2	
	26	11.575	16.5	191	2	2	2
BLOCK-D	PROPOSED PLOT						
	8	8.575	16.5	141.49	3	3	
	9	8.575	16.5	141.49	3	3	
	10	8.575	16.5	141.49	3	3	

DAFFODILS

REVISED PLOT DISTRIBUTION AND POPULATION PROJECTION

AREA(SQ. MT.)	NO. OF PLOTS	PERMISSIBLE NO. OF UNITS	PERSON /UNIT	POPULATION
0-100	136	136		
101-150	294	294		
151-200	154	154		
201-250	93	93		
251-300	5	5		
301-500	0	0		
TOTAL	682	682	5	3410
GROUP HOUSING	1	302	5	1510
L.I.G. HOUSING		98	5	490
E.W.S. HOUSING		98	5	490
	TOTAL POPULATION			5900

AREA DETAILS

SITE AREA PROGRAM

DESCRIPTION	AREA DISTRIBUTION		TOTAL	PERCENTAGE	
	(SQ. MT.)	(ACRE)	(ACRES)		
			77.58		
GOOL AREA	12810.00	3.17			
CHAK ROAD	3707.52	0.92			
KACHHI NAALI AREA	5032.47	1.24			
TOTAL UNUSED AREA			5.33		
TOTAL SITE AREA	290283.63		72.25		
LAND LEFT FOR ROAD WIDENING(51.9M)	2927.73	0.72			
GREEN BELT (50M)	9452.41	2.34			
GREEN BELT (100M) UNDER HT. LINE	14897.67	3.68			
TOTAL LAND FOR ROAD WIDENING AND GREEN BELT	27277.81		6.74		
NET SITE AREA	263005.82		65.51		
GREEN AND PARK AREAS	39697.83	9.87			15.09%
TOTAL AREA FOR ROW HOUSES/ VILLAS	98520.86	22.90		37.46%	
GROUP HOUSING PLOT	18557.09	10.26		7.06%	
TOTAL AREA FOR RESIDENTIAL	117077.95		33.16		50.62%
L.I.G. /E.W.S HOUSING PLOT	8501.36	2.10		3.23%	
SCHOOL	4007.99	0.99		1.52%	
NURSERY SCHOOL	543.00	0.13		0.21%	
COMMUNITY CENTER	4924.16	1.16		1.87%	
COMMERCIAL	10336.12	2.67		3.93%	
CONVENIENCE SHOPPING	2826.85	0.62		1.07%	
POLICE STATION WITH RESIDENTIAL FACILITY	1554.35	0.38		0.59%	
GARBAGE DISPOSAL	90.00	0.02		0.03%	
11KVA ELECTRIC SUBSTATION	501.78	0.12		0.19%	
AAGANWADI	530.00	0.12		0.20%	
CHABUTRA	45.00	0.01		0.02%	
TOTAL AREA FOR ROADS	72369.43	13.95		27.52%	
					34.35%
	263005.82	77.63		100.00%	

GREEN AREA

S.NO.	AREA (SQ. MT.)
1	1140.08
2	1737.98
3	553
4	2081.74
5	526.31
6	2031.26
7	491.29
8	1640.35
9	330
10	212.5
11	390
12	195
13	214.45
14	1853
15	1256.95
16	283.07
17	1721.43
18	2486.44
19	168.75
20	168.75
21	4820.12
22	310.53
23	333.08
24	360.12
25	374.7
26	289.79
27	782.95
28	375.03
29	493.15
30	167.85
31	1012.05
32	2170.16
33	305.58
34	413.03
35	756.22
36	893.78
37	940.12
38	313.5
39	630.6
40	2527.46
41	655.07
42	922.62
43	367.97
TOTAL	39697.83

PLOT A- BETA SECTOR

CLUSTER NAME	PLOT NO.	PLOT DIMENSION	PLOT AREA [sqmt]	SETBACK (MT.) FRONT	REAR	SIDE	SIDE
A	1	11.575m x 17.5m	205.62	3.0	3.0	3.0	-
	2-3	11.575m x 17.5m	202.56	3.0	3.0	3.0	-
	4-5	8.575m x 17.5m	150	2.0	2.0	-	-
	6	11.575m x 17.5m	202.56	3.0	3.0	3.0	-
B	1	11.575m x 17.5m	207.66	3.0	3.0	3.0	-
	2-3	11.575m x 17.5m	202.56	3.0	3.0	3.0	-
	4-5	8.575m x 17.5m	150	2.0	2.0	-	-
	6	11.575m x 17.5m	202.56	3.0	3.0	3.0	-
C	1	11.575m x 17.5m	202.56	3.0	3.0	3.0	-
	2-5	8.575m x 17.5m	150	2.0	2.0	-	-
	6	11.575m x 17.5m	202.56	3.0	3.0	3.0	-
D	1	13m x 17.5m	227.5	3.0	3.0	3.0	-
	2-5	10m x 17.5m	175	3.0	3.0	-	-
	6	13m x 17.5m	200.96	3.0	3.0	3.0	-
E	1	11.655m x 12.5m	144.71	2.0	2.0	2.0	-
	2-4	8.0m x 12.5m	100	1.5	1.5	-	-
	5-6	10m x 12.5m	125	2.0	2.0	2.0	-
	7-8	8.0m x 12.5m	100	1.5	1.5	-	-
	9-10	10m x 12.5m	125	2.0	2.0	2.0	-
	11-12	8.0m x 12.5m	100	1.5	1.5	-	-
	13-14	10m x 12.5m	125	2.0	2.0	2.0	-
	15-17	8.0m x 12.5m	100	1.5	1.5	-	-
	18	10.908m x 12.5m	140.3	2.0	2.0	2.0	-
F	1	13m x 17.5m	227.5	3.0	3.0	3.0	-
	2-4	10m x 17.5m	175	3.0	3.0	-	-
	5	13m x17.5m	227.5	3.0	3.0	3.0	-
G	1	11.6m x18m	208	2.0	2.0	2.0	-
	2-6	8.575m x18m	154	3.0	3.0	-	-
	7-8	11.6m x18m	208	1.5	1.5	-	-
	9-13	8.575m x18m	154	2.0	2.0	2.0	-
	14	11.6m x18m	208				
H	1	9.725m x 12.5m	117.5	2.0	2.0	2.0	-
	2-3	8m x 12.5m	100	1.5	1.5	-	-
	4-5	10m x 12.5m	125	2.0	2.0	2.0	-
	6-7	8m x 12.5m	100	1.5	1.5	-	-
	8-9	10m x 12.5m	125	2.0	2.0	2.0	-
	10-11	8m x 12.5m	100	1.5	1.5	-	-
	12-13	10m x 12.5m	125	2.0	2.0	2.0	-
	14-15	8m x 12.5m	100	1.5	1.5	-	-
	16	10.344m x 12.5m	125.23	2.0	2.0	2.0	-
J	1	8.50 m x 18.0 m	147.9	2.0	2.0	-	-
	2	8.5m x 18.00m	153	3.0	3.0	-	-
	3	8.5m x 18.00m	153	3.0	3.0	-	-
	4	8.5m x 18.00m	153	3.0	3.0	-	-
	5	8.5m x 18.00m	150.4	3.0	3.0	-	-
K	1	10.030m x 12.5m	127.77	2.0	2.0	2.0	-
	2	8m x 12.5m	100	1.5	1.5	-	-
	3-4	10m x 12.5m	125	2.0	2.0	2.0	-
	5-6	8m x 12.5m	100	1.5	1.5	-	-
	7-8	10m x 12.5m	125	2.0	2.0	2.0	-
	9-10	8m x 12.5m	100	1.5	1.5	-	-
	11-12	10m x 12.5m	125	2.0	2.0	2.0	-
	13	8m x 12.5m	100	1.5	1.5	-	-
	14	11.020m x 12.5m	134.36	2.0	2.0	2.0	-
L	1	13m x 17.5m	227.5	3.0	3.0	3.0	-
	2-4	10m x 17.5m	175	3.0	3.0	-	-
	5	13m x17.5m	227.5	3.0	3.0	3.0	-
M	1	11.6m x18m	208	2.0	2.0	2.0	-
	2-6	8.575m x18m	154	3.0	3.0	-	-
	7-8	11.6m x18m	208	1.5	1.5	-	-
	9-13	8.575m x18m	154	2.0	2.0		-
	14	11.6m x18m	208	2.0	2.0	2.0	-
N	1	10m x 15.25m	147.63	2.0	2.0	-	-
	2	8m x 14.26m	110.81	2.0	2.0	-	-
	3	9.91m x 13.43m	125.46	2.0	2.0	-	-
O	1	10m x 12.5m	125	2.0	2.0	2.0	-
	2	8m x 12.5m	100	1.5	1.5	-	-
	3-4	10m x 12.5m	125	2.0	2.0	2.0	-
	5-6	8m x 12.5m	100	1.5	1.5	-	-
	7-8	10m x 12.5m	125	2.0	2.0	2.0	-
	9-10	8m x 12.5m	100	1.5	1.5	-	-
	11-12	10m x 12.5m	125	2.0	2.0	2.0	-
	13	8m x 12.5m	100	1.5	1.5	-	-
	14	10m x 12.5m	125	2.0	2.0	2.0	-
P	1	10m x 12.5m	125	2.0	2.0	2.0	-
	2-6	8m x 12.5m	100	1.5	1.5	-	-
	7-8	10m x 12.5m	125	2.0	2.0	2.0	-
	9-14	8m x 12.5m	100	1.5	1.5	-	-
	15	10m x 12.5m	125	2.0	2.0	2.0	-
	16	10m x 12.5m	125	2.0	2.0	2.0	-
	17-22	8m x 12.5m	100	1.5	1.5	-	-
	23-24	10m x 12.5m	125	2.0	2.0	2.0	-
	25-29	8m x 12.5m	100	1.5	1.5	-	-
	30	10m x 12.5m	125	2.0	2.0	2.0	-

DAFFODILS

DAFFODILS VILLAS EXTENSION
8 VILLAS
1216.19 SQ.MT

Q	1	8.50m x 18.00m	153	3.0	3.0		-
	2	8.50m x 18.00m	153	3.0	3.0		-
	3	8.50m x 18.00m	152.9	3.0	3.0		-
R	1	10m x 12.5m	125	2.0	2.0	2.0	-
	2-11	8m x 12.5m	100	1.5	1.5	-	-
	12	10m x 12.5m	125	2.0	2.0	2.0	-
S	1	11.554m x 12.5m	124.21	2.0	2.0	2.0	-
	2	8m x 12.5m	100	1.5	1.5	-	-
	3-4	10m x 12.5m	125	2.0	2.0	2.0	-
	5-6	8m x 12.5m	100	1.5	1.5	-	-
	7-8	10m x 12.5m	125	2.0	2.0	2.0	-
	9-10	8m x 12.5m	100	1.5	1.5	-	-
	11-12	10m x 12.5m	125	2.0	2.0	2.0	-
	13	8m x 12.5m	100	1.5	1.5	-	-
	14	14.259m x 12.5m	162.48	2.0	2.0	2.0	-
T	1	10m x 12.5m	125	2.0	2.0	2.0	-
	2-6	8m x 12.5m	100	1.5	1.5	-	-
	7-8	10m x 12.5m	125	2.0	2.0	2.0	-
	9-12	8m x 12.5m	100	1.5	1.5	-	-
	13	10m x 12.5m	122.14	2.0	2.0	2.0	-
	14	10m x 12.5m	125	2.0	2.0	2.0	-
	15-20	8m x 12.5m	100	1.5	1.5	-	-
	21-22	10m x 12.5m	125	2.0	2.0	2.0	-
	23-27	8m x 12.5m	100	1.5	1.5	-	-
	28	10m x 12.5m	125	2.0	2.0	2.0	-
U	1	11.185m x 12.5m	120.83	2.0	2.0	2.0	-
	2-3	10m x 12.5m	125	2.0	2.0	2.0	-
	4-5	8m x 12.5m	100	1.5	1.5	-	-
	6-7	10m x 12.5m	125	2.0	2.0	2.0	-
	8-9	8m x 12.5m	100	1.5	1.5	-	-
	10-11	10m x 12.5m	125	2.0	2.0	2.0	-
	12	13.939m x 12.5m	158.49	2.0	2.0	2.0	-
V	1	11.575m x 17.5m	202.56	3.0	3.0	3.0	-
	2-4	8.575m x 17.5m	150	2.0	2.0	-	-
	5-8	11.575m x 17.5m	202.56	2.0	2.0	-	-
	9	8.575m x17.5m	150	2.0	2.0	-	-
	10-11	11.575m x 17.5m	202.56	3.0	3.0	3.0	-
	12-14	8.575m x 17.5m	150	2.0	2.0	-	-
	15	11.575m x 17.5m	202.56	3.0	3.0	3.0	-
W	1	11.08m x 12.5m	118.95	2.0	2.0	2.0	-
	2-3	10m x 12.5m	125	2.0	2.0	2.0	-
	4-5	8m x 12.5m	100	1.5	1.5	-	-
	6-7	10m x 12.5m	125	2.0	2.0	2.0	-
	8-9	8m x 12.5m	100	1.5	1.5	-	-
	10-11	10m x 12.5m	125	2.0	2.0	2.0	-
	12	13.854m x 12.5m	156.95	2.0	2.0	2.0	-
X	1	10m x 12.5m	125	2.0	2.0	2.0	-
	2-9	8.0m x 12.5m	100	1.5	1.5	-	-
	10-11	10m x 12.5m	125	2.0	2.0	2.0	-
	12-19	8.0m x 12.5m	100	1.5	1.5	-	-
	20	10m x 12.5m	119.89	2.0	2.0	2.0	-
Y	1	10m x 12.568m	125.34	2.0	2.0	2.0	-
	2	8.0m x 12.622m	100.76	1.5	1.5	-	-
	3	8.0m x 12.676m	101.19	1.5	1.5	-	-
	4	8.0m x 12.715m	101.57	1.5	1.5	-	-
	5	8.0m x 12.721m	101.74	1.5	1.5	-	-
	6	8.0m x 12.726m	101.78	1.5	1.5	-	-
	7	8.0m x 12.731m	101.83	1.5	1.5	-	-
	8	8.0m x 12.742m	101.89	1.5	1.5	-	-
	9	8.0m x 12.759m	102	1.5	1.5	-	-
	10	16.316m x 12.759m	187.98	2.0	2.0	2.0	-
Z	1	10m x 12.5m	125	2.0	2.0	2.0	-
	2	8m x 12.5m	100	1.5	1.5	-	-
	3-4	10m x 12.5m	123.87	2.0	2.0	2.0	-
	5-6	8m x 12.5m	100	1.5	1.5	-	-
	7	10m x 12.5m	125	2.0	2.0	2.0	-
Z1	1	10.316m x 12.5m	133.32	2.0	2.0	2.0	-
	2-7	8m x 12.5m	100	1.5	1.5	-	-
	8	10m x 12.5m	125	2.0	2.0	2.0	-
Z2	1	12.306m x 12.5m	131.95	2.0	2.0	2.0	-
	2-9	8.0m x 12.5m	100	1.5	1.5	-	-
	10	10m x 12.5m	125	2.0	2.0	2.0	-
Z3	1	10.88m x 12.5m	130.02	2.0	2.0	2.0	-
	2-3	8.0m x 12.5m	100	1.5	1.5	-	-
	4	9.818m x 12.5m	111.89	1.5	1.5	-	-
	5	8m x 12.5m	100	2.0	2.0	-	-
	6	10.0m x 12.5m	125	2.0	2.0	2.0	-
Z4	1	10m x 13.336m	133.36	2.0	2.0	2.0	-
	2	8m x 13.336m	106.69				-
	3	8m x 13.117m	105.61	1.5	1.5	-	-
	4	8m x 12.935m	104.21	1.5	1.5	-	-
	5	8m x 12.744m	102.72	1.5	1.5	-	-
	6	8m x 12.573m	101.21	1.5	1.5	-	-
	7	8m x 12.436m	100	1.5	1.5	-	-
	8	8.830m x 12.503m	112.36	1.5	1.5	-	-
	9-11	8m x 12.502m	100	1.5	1.5	-	-
	12	10m x 12.534m	165.5	3.0	3.0	3.0	-
Z5	1	10m x 15.731m	160.33	3.0	3.0	3.0	-
	2	8m x 15.251m	123.96	2.0	2.0	-	-
	3	8m x 14.786m	120.18	2.0	2.0	-	-
	4	8m x 14.314m	116.4	2.0	2.0	-	-
	5	8m x 13.850m	112.66	2.0	2.0	-	-
	6	8m x 13.386m	108.94	2.0	2.0	-	-
	7	8m x 12.922m	105.23	2.0	2.0	-	-
	8	10m x 12.347m	126.35	2.0	2.0	2.0	-
TOTAL PLOT S	339						

DAFFODILS

SECOND SANCTION AREA

OWNER'S NAME AND SIGNATURE
SHALIMAR KSMB
PROJECT.ARCHITECT@SHALIMAR.ORG,7310106603

ARCH/ENG'S NAME AND SIGNATURE | STRUCTURE ENGINEER
SADANAND KUMAR
CA/2013/58886

Lucknow Development Authority

Building Plan Application Number: LDA/LD/22-23/0277
Sanctioned On: 14 Jul 2022
Valid Till: 17 Jul 2027
Approved By: Vice Chairman (Vice Chairman)
Examined By:
Rajesh Sharma (Junior engineer)
Shiv Kumar (Junior engineer)
Nagendra Singh (Assistant Engineer)
Bhupendra Veer Singh (Executive engineer)
Nitin Mital (Chief Town Planner)
Pawan kumar Gangwar (Secretory)

Note: - 1) This drawing is prepared as per the current prevailing Building Bye Laws.
2) If Map sanctioned is used for purpose anything other than stated in application will lead to rejection of Map.

Total Plot Area: -	12417.05	Total FAR Area: -	.0
Total Coverage Area: - .0		Total BUA Area: -	.0

The correctness and accuracy of Proposal Information and drawing is a responsibility of POR/owner. Accuracy of Scrutiny Report is subject to accuracy of end-user provided data, 3rd party software/hardware/services, etc. SoftTech Engineers Ltd. is not liable for any damages which may arise from use, or inability to use the Application. Texts printed in 'Italics' and 'Blue' color are user inputs, which are not verified and not generated by scrutiny software.

Project Title :PROPOSED REVISED LAYOUT WITH MINOR CORRECTION AGAINST PREVIOUS SANCTION LAYOUT PERMIT NO. 2018081816272281 0 DATED- 07-03-2019 (GHAILA TOWNSHIP) Village: Ghaila & Alinagar, Lucknow for Shalimar KSMB Village Ghaila, Khasra No:- 2,3,4,5,6,7,12,13,14,23,24,25,27,31,32,87,88,89,89/1594,90Ka,91Ka,91Kha,91Ga,91Gha,92,93,94,95,96,97,108,110,114,115,115/1553,116,117,119Ka,120,121Ka,121Kha,122,123,124Ka,124Kha,181,182,183,184,191,192,195,195/1546,200,201,202,203,204,206,207,209,212,213,214,215,216,217,219,230,231,234,235,236,239,240Sa,Village Ali Nagar, Khasara No:- 5,23,25,26,27,29,35,36,37,39,41,45,46,48(PREVIOUS SANCTIONED PLOTTED RESI DEVELOPMENT / PLOTTED HOUSING/03660/LDA/LD/20-21/2742/29112021 DATED 11 MAR 2022)

Title	LOKA DOO DISEY	Sheet	a
Creation Date	2022-06-23	Scale	1:150

SITE PLAN LAND SCPE & SERVICES PLAN

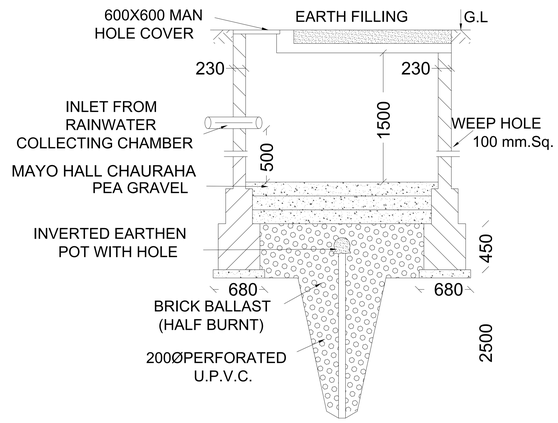

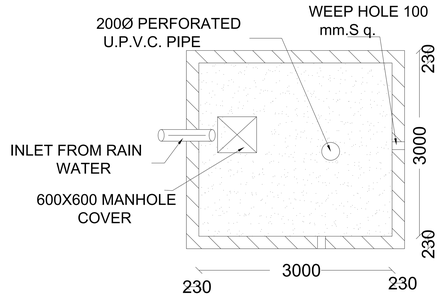

PLAN

WATER RECHARGING PIT

(NOT TO SCALE)

(6.0 MT. DEEP)

Garden Bay

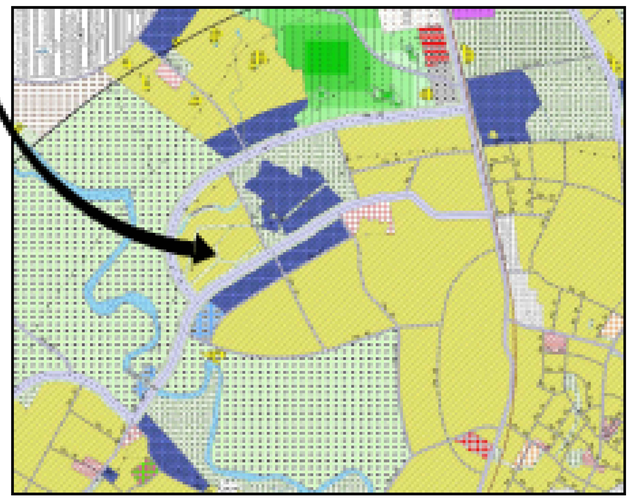

LUCKNOW MASTER PLAN 2031

OWNER'S NAME AND SIGNATURE

SHALIMAR KSMB
PROJECT,ARCHITECT@SHALIMAR ORG,7310188003

ARCHITECT'S NAME AND SIGNATURE | STRUCTURE ENGINEER

SADHANAND KUMAR
CA/2011/53008
Lucknow Development Authority

Building Plan Application Number
LDA/LD/22-23/0277

Sanctioned On
14 Jul 2022

Valid Till
17 Jul 2027

Approved By
Vice Chairman (Vice Chairman)

Examined By
Rajesh Sharma (Junior engineer)
Shiv Kumar (Junior engineer)
Nagendra Singh (Assistant Engineer)
Bhupendra Veer Singh (Executive engineer)
Nitin Mittal (Chief Town Planner)
Pawan kumar Gangwar (Secretary)

Note: - 1) This drawing is prepared as per the current prevailing Building Bye Laws.
2) If Map sanctioned is used for purpose anything other than stated in application will lead to rejection of Map.

Total Plot Area :-	12417.05	Total FAR Area :-	.0
Total Coverage Area :-	.0	Total BUA Area :-	.0

DCO_SJI_3dwnl_6AD_[1682.00_x_2378.00_MM]

The correctness and accuracy of Proposed Information and drawing is a responsibility of PO/Owner. Accuracy of Scrutiny Report is subject to accuracy of end-user provided data. 3rd party software/hardware/services etc. SAPIUM Engineers Ltd. is not liable for any damages which may arise from use. Liability to use the Application, Tools provided in Tabbur and Blue Print are user's sole risk, which are not verified and not generated by scrutiny software.

Project Title :PROPOSED REVISED LAYOUT WITH MINOR CORRECTION AGAINST PREVIOUS SANCTION LAYOUT PERMIT NO. 2018061816272281O DATED- 07-03-2019 (GHAILA TOWNSHIP) Village: Ghaila & Alinagar, Lucknow for Shalimar KSMB Village Ghaila, Khasra No:- 2,3,4,5,6,7,12,13,14,23,24,25,27,31,32,87,88,89,89/1594,90Ka,91Ka,91Kha,91Ga,91Gha,92,93,94,95,96,97,108,110,114,115,115/1553,116,117,119Ka,120,121Ka,121Kha,122,123,124Ka,124Kha,181,182,183,184,191,192,195,195/1546,200,201,202,203,204,206,207,209,212,213,214,215,216,217,219,230,231,234,235,236,239,240Sa,Village Ali Nagar, Khasara No:- 5,23,25,26,27,29,35,36,37,39,41,45,46,48(PREVIOUS SANCTIONED PLOTTED RESI DEVELOPMENT / PLOTTED HOUSING03660/LDA/LD/20-21/2742/29112021 DATED 11 MAR 2022)

Title :	LDA/LD/20-21/2277	Sheet	1
Drawn Date	2022-06-23	Scale	1:150

Project Title :PROPOSED REVISED LAYOUT WITH MINOR CORRECTION AGAINST PREVIOUS SANCTION LAYOUT PERMIT NO. 2018061816272281O DATED- 07-03-2019 (GHAILA TOWNSHIP)

Village: Ghaila & Alinagar, Lucknow for Shalimar KSMB Village Ghaila, Khasra No:- 2,3,4,5,6,7,12,13,14,23,24,25,27,31,32,87,88,89,89/1594,90Ka,91Ka,91Kha,91Ga,91Gha,92,93,94,95,96,97,108,110,114,115,115/1553,116,117,119Ka,120,121Ka,121Kha,122,123,124Ka,124Kha,181,182,183,184,191,192,195,195/1546,200,201,202,203,204,206,207,209,212,213,214,215,216,217,219,230,231,234,235,236,239,240Sa,

Village Ali Nagar, Khasara No:- 5,23,25,26,27,29,35,36,37,39,41,45,46,48

Area	DRAWN BY		
Scale	SHALIMAR KSMB		
	PROJECT	SANCTION PLAN 2018071 01	
SQ.M.	DR. M.	SUP.I.	DIR.
FEET			
METRE			

N

LEGEND :-

DRAIN

WATER LINE

ELEC.LINE

SEWER LINE

RAIN WATER HARVESTING — R. WH

RAIN WATER HARVESTING — STP 850

OWNER'S NAME AND SIGNATURE

SHALIMAR KSMB
PROJECT,ARCHITECT,SHALIMAR ORG,7101138803

ARCHITECT'S NAME AND SIGNATURE / SPECTURE ENGINEER

SAGAR KUMAR

CA/2012/50868
SAGAR KUMAR
C/O SHALIMAR CORPORATION
SHALIMAR CORPORATION
SHALIMAR CORPORATION

Lucknow Development Authority

Building Plan Application Number
LDA/LD/20-21/2277

Sanctioned On
14 Jul 2022

Valid Till
17 Jul 2027

Approved By
Vice Chairman (Vice Chairman)

Examined By
Rajesh Sharma (Junior engineer)
Shiv Kumar (Junior engineer)
Nagendra Singh (Assistant Engineer)
Bhupendra Veer Singh (Executive engineer)
Nitin Misal (Chief Town Planner)
Pawan kumar Gangwar (Secretary)

Note: - 1) This drawing is prepared as per the current prevailing Building Bye Laws.
2) If Map sanctioned is used for purpose anything other than stated in application will lead to rejection of Map.

Total Plot Area :-	124117.05	Total FAR Area :-	0
Total Coverage Area :-	0	Total BUA Area :-	0

ISO_full_bleed_4A0_(1682.00_x_2378.00_MM)

The correctness and accuracy of Proposed Information and drawing is a responsibility of PO/Owner. Accuracy of Scrutiny Report is subject to accuracy of end-user provided data. 3rd party software/services/services, etc. SUPERvisor Engineers Ltd. is not liable for any damages which may arise from use, or inability to use the Application. Tools printed in Yellow and Blue color are user inputs, which are not verified and not generated by scrutiny software.

Project Title :PROPOSED REVISED LAYOUT WITH MINOR CORRECTION AGAINST PREVIOUS SANCTION LAYOUT PERMIT NO. 2018061816272281 0 DATED- 07-03-2019 (GHAILA TOWNSHIP) Village: Ghaila & Alinagar, Lucknow for Shalimar KSMB Village Ghaila, Khasra No:- 2,3,4,5,6,7,12,13,14,23,24,25,27,31,32,87,88,89,89/1594,90Ka,91Ka,91Kha,91Ga,91Gha,92,93,94,95,96,97,108,110,114,115,115/1553,116,117,119Ka,120,121Ka,121Kha,122,123,124Ka,124Kha,181,182,183,184,191,192,195,195/1546,200,201,202,203,204,206,207,209,212,213,214,215,216,217,219,230,231,234,235,236,239,240Sa,Village Ali Nagar, Khasara No:- 5,23,25,26,27,29,35,36,37,39,41,45,46,48(PREVIOUS SANCTIONED PLOTTED RESI DEVELOPMENT / PLOTTED HOUSING/03660/LDA/LD/20-21/2742/29112021 DATED 11 MAR 2022)

Title :	LDA/LD/20-21/2277	Sheet	8
Creation Date :	2022-06-23	Scale	1:150

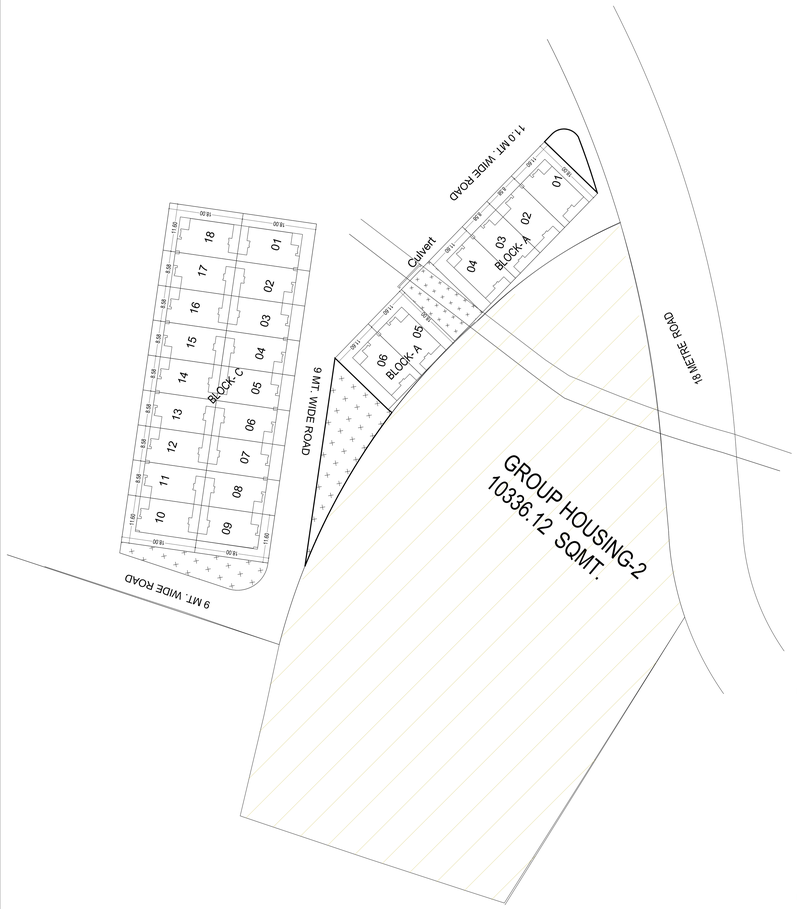

Blowup plan

DESCRIPTION

CHANGES MARKED

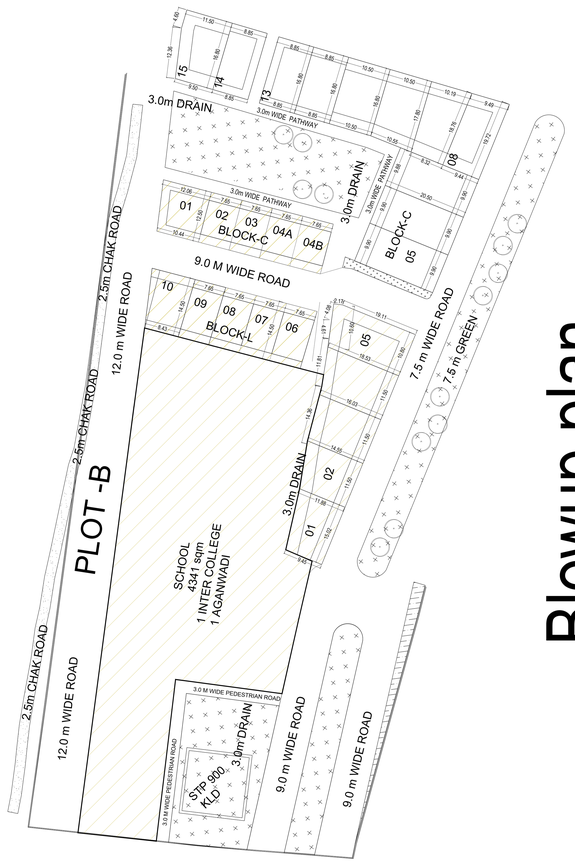

Blowup plan

DESCRIPTION

CHANGES MARKED

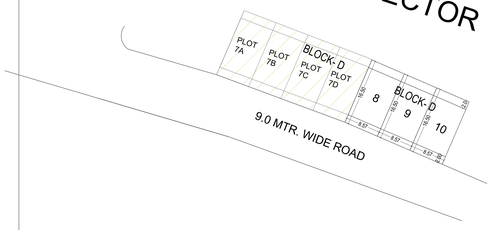

Blowup plan

OWNER'S NAME AND SIGNATURE

SHALIMAR KSMB
PROJECT.ARCHITECT@SHALIMAR.ORG,7310188003

ARCHITECTS NAME AND SIGNATURE / STRUCTURE ENGINEER

SADHANAND KUMAR
CA/2011/50868
Plot No. 2, Sector-A,
Sitapur Sector-A,
Sitapur Extension,
Sitapur Extension Colony,
Sitapur, Lucknow

Lucknow Development Authority

Building Plan Application Number
LDA/LD/21-2/0277

Sanctioned On:
14 Jul 2022

Valid Till
17 Jul 2027

Approved By
Vice Chairman (Vice Chairman)

Examined By
Rajesh Sharma (Junior engineer)
Shiv Kumar (Junior engineer)
Nagendra Singh (Assistant Engineer)
Bhupendra Veer Singh (Executive engineer)
Nitin Misal (Chief Town Planner)
Pawan kumar Gangwar (Secretary)

Note: - 1) This drawing is prepared as per the current prevailing Building Bye Laws.
2) If Map sanctioned is used for purpose anything other than stated in application will lead to rejection of Map.

Total Plot Area : -	124117.05	Total FAR Area : -	.0
Total Coverage Area : -	.0	Total BUA Area : -	.0

ISO_full_bleed_4A0_(1682.00_x_2378.00_MM)

The correctness and accuracy of Proposal information and drawing is a responsibility of PO/Owner. Accuracy of Scrutiny Report is subject to accuracy of end-user provided data, 3rd party software/hardware/services, etc. SoftArch Engineers Ltd. is not liable for any damages which may arise from use, or inability to use the Application. Tools printed in Yellow and Blue color are user inputs, which are not verified and not generated by scrutiny software.