Project Title : REVISED SUBMISSION DRAWING FOR GROUP HOUSING " OFFICER CITY - 2 " RESIDENTIAL LAYOUT ATKHASRA NO. - 1048M , 1049M , 1059M , 1060M , 984 , 985 & 986M , AT VILLAGE NOOR - NAGAR , GHAZIABAD (U.P.)OWNER -: M/s.- M.R. PROVIEW REALTECH PVT.LTD. , (THROUGH: Mr. - VIJAY KUMAR) M/s.- R.K.S BUILDCON INDIA PVT. LTD.

File No	GDA/LD/23-24/1128	Sheet	4 / 4
Submission Date	2023-11-09	Scale	1:100

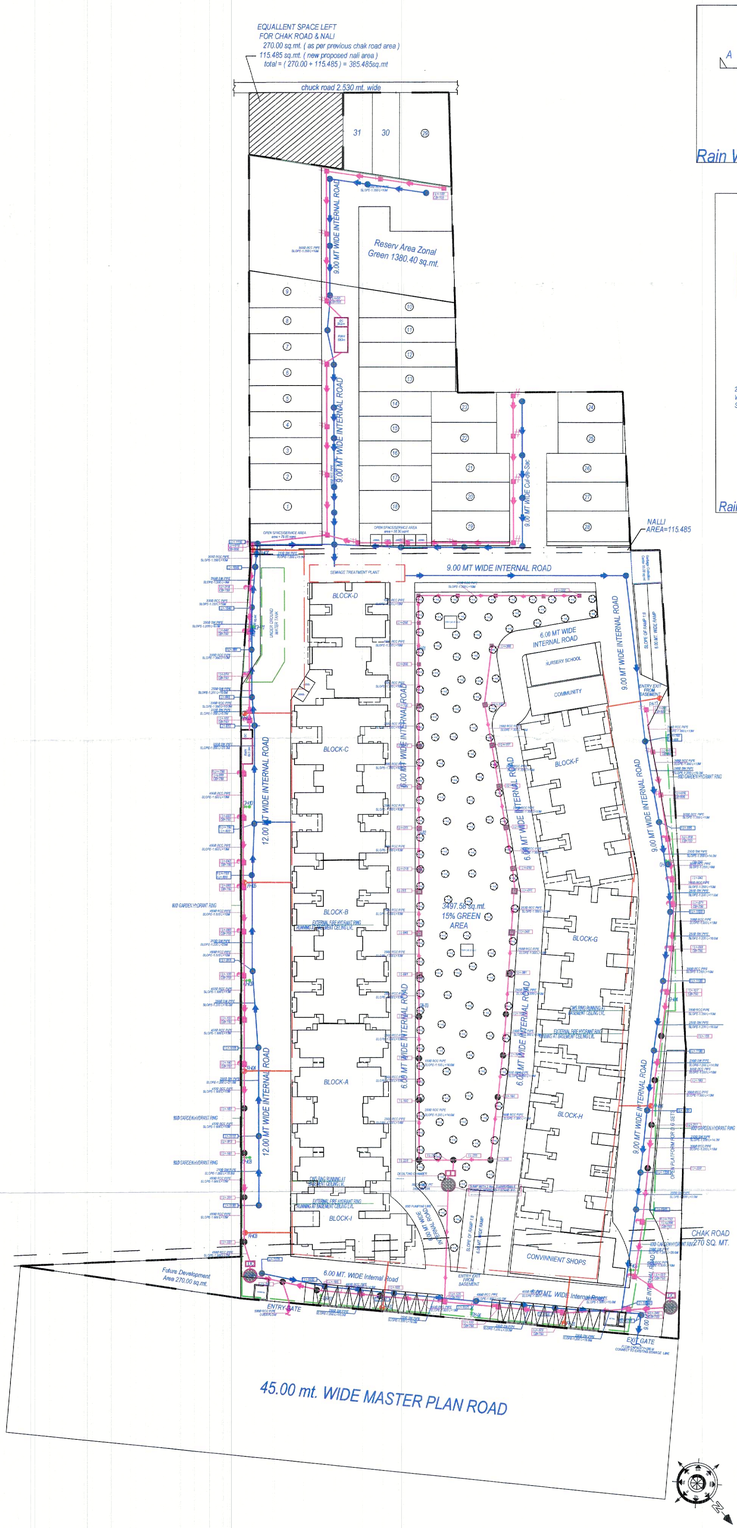

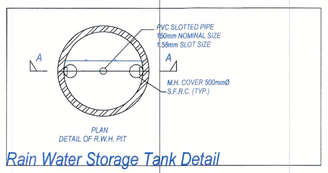

Rain Water Storage Tank Detail

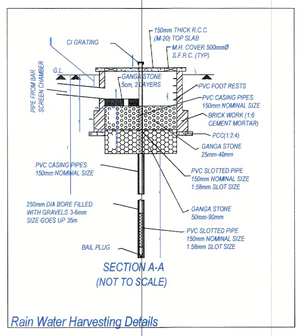

Rain Water Harvesting Details

LEGEND

SYMBOL	DESCRIPTION
	EXTERNAL SEWER LINE
	EXTERNAL STORM LINE
	COLD WATER SUPPLY LINE
	FLUSHING WATER SUPPLY LINE
	EXTERNAL FIRE HYDRANT RING
	GARDEN HYDRANT RING
MH	EXTERNAL SEWER LINE MANHOLE
SMH	EXTERNAL STORM LINE MANHOLE
EFH	FIRE HYDRANT (80Ø TO EFH)
GH	GARDEN HYDRANT (25Ø TO GH)
PGL	PODIUM GROUND LVL.
IL	INVERT LVL.
RL	ROAD LVL.
B.O.P.	BOTTOM OF PIPE
BW	BORE WELL
RWH	RAIN WATER HARVESTING PIT.
DC	DESALTING CHAMBER

STANDARD MANHOLE SIZE & DEPTH

MANHOLE SIZE	DEPTH
--	0.45M-0.9M
MH-910Ø	0.9M-1.65M
MH-1220Ø	1.65M-2.3M
MH-1520Ø	ABOVE-2.3M

LEGEND

SYMBOL	DESCRIPTION
	EXTERNAL SEWER LINE
	EXTERNAL STORM LINE
	COLD WATER SUPPLY LINE

STANDARD CATCH BASIN SIZE & DEPTH

CATCH BASIN SIZE	DEPTH
--	0.45M-0.6M
--	0.6M-0.75M
--	0.75M-0.9M
--	0.9M-1.5M

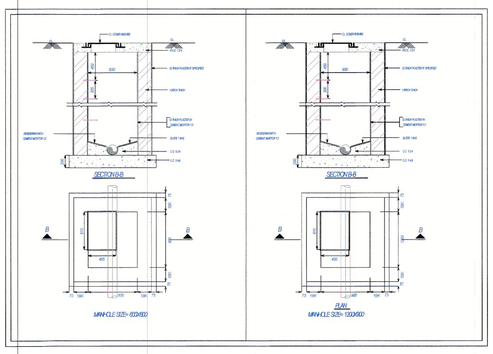

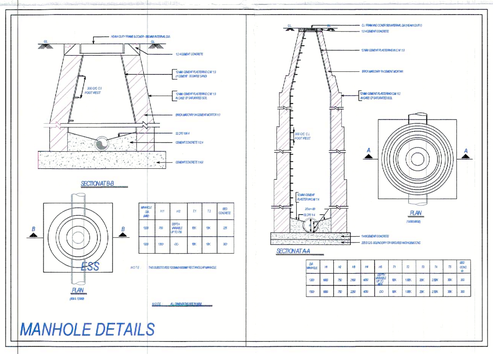

MANHOLE DETAILS

AREA STATEMENT (COMPOUNDING)

S.NO		PARTICULARS		SQ.MTR.
1		TOTAL PLOT AREA		26775.31
2		BREAKUP OF LAND AREA		
	i	OLD SANCTIONED PLOT AREA (FOR HOUSING)	19702.01	
	ii	AREA OF NEW ADDITIONAL LAND (FOR PLOTTING DEVELOPMENT)	7073.30	
3		NET EFFECTIVE PLOT AREA (a + b)		21,669.61
	a.	OLD NET EFFECTIVE PLOT AREA (after deducting15% green & 500.00 sq.mt. school area) = 19,702.01 - 2,955.30 + 500.00 = 16,246.71sq.mt.	16,246.71---a	
	b.	NEW ADDITIONAL LAND AREA (FOR PLOTTING DEVELOPMENT) TOTAL LAND - (ZONAL PLAN GREEN + SPACE LEFT FOR FUTURE EXPANSION) = 7073.30 - (1380.40 + 270.00) = 5,422.90 sq.mt.	5,422.90---b	
4		TOTAL GREEN AREA (c + d)		3,497.59
	i	OLD SANCTIONED AREA (FOR HOUSING)	2955.30-----c	
	ii	AREA OF NEW ADDITIONAL LAND @10% OF (FOR PLOTTING DEVELOPMENT) 5422.90 X 10% = 542.29	542.29-----d	
5		PERM. GROUND COVG. = 40%OF PLOT AREA = 40% OF 16246.71 = 6498.68		6498.68
6		STILT / GROUND COVERAGE (0.79%) (applied for compounding)		128.49

a.	BLOCK'S NAME	already compounded	completion already taken	applied for compounding
1.	BLOCK - A	729.46	729.46	------
2.	BLOCK - B	657.74	657.74	------
3.	BLOCK - C	597.74	------	------
4.	BLOCK - D	368.07	------	------
5.	BLOCK - F	635.26	635.26	------
6.	BLOCK - G	632.78	632.78	------
7.	BLOCK - H	669.79	669.79	------
8.	BLOCK - I	337.61	337.61	------
9.	CONVENIENT SHOPS	342.19	------	------
10.	COMMUNITY FACILITY	------	------	128.49
	TOTAL	4970.64	3,662.64	128.49

7	PERMISSIBLE BASEMENT AREA (only single lvl.)		13,971.40
8	EXISTING BASEMENT AREA		

	particular	already compounded	completion already taken	applied for compounding
i	UPPER BASEMENT	12,118.99	8,687.78	858.15
ii	LOWER BASEMENT	12,118.99	8,687.78	858.15

9	TOTAL PERMISSIBLE F.A.R. AREA		64,134.43
	i. GROUP HOUSING		
	a. ALREADY SANCTIONED VIDE FILE NO.-472/GM/PGH-(12-13) DATED-30/08/2013@3.75	60,924.482	
	b. ALREADY COMPOUNDED VIDE FILE NO.-564/ZONE-1/14-15 DATED-21/11/2015	3209.948	
	TOTAL	64,134.43	
10	F.A.R. AREA (0.16%) (applied for compounding block - C , D & COMMUNITY FACILITY)		2,644.55

a.	BLOCK'S (NAME)	already compounded (A)	to be compound (B)	completion already taken (C)	total FAR area (A+B)
1.	BLOCK - A	10,107.01	------	10,107.01	10,107.01
2.	BLOCK - B	9,102.93	------	9,102.93	9,102.93
3.	BLOCK - C	7,083.67	1179.26	------	8262.93
4.	BLOCK - D	3,967.47	1079.82	------	5047.29
5.	BLOCK - F	8,765.98	------	8,765.98	8,765.98
6.	BLOCK - G	8,731.26	------	8,731.26	8,731.26
7.	BLOCK - H	8,768.08	------	8,768.08	8,768.08
8.	BLOCK - I	4,604.08	------	4,604.08	4,604.08
9.	CONVENIENT SHOPS	521.79	------	------	521.79
10.	COMMUNITY FACILITY	------	385.47	------	385.47
	TOTAL	61,652.27	2,644.55	50,079.34	64,296.82

11	PERMISSIBLE RESIDENTIAL UNITS		1016
	i. GROUP HOUSING		
	A. OLD LAND AREA = 19,702.01sq.mt. (Units @330 / hect. on 2.5 F.A.R + Proportionate on Purchasable)	975 -----A	
	B. AREA COMPOUNDED = 3,108.398sq.mt. (Proportionate units on compounding @75.85 sq.mt.)	41 -----B	
	TOTAL UNITS = A + B	1016	
12	RESIDENTIAL UNITS (applied for compounding block - C & D)		34

a.	BLOCK'S NAME	already compounded (A)	to be compound (B)	completion already taken (C)	Total units (A+B)
1.	BLOCK - A	112	------	112	112
2.	BLOCK - B	112	------	112	112
3.	BLOCK - C	96	16	------	112
4.	BLOCK - D	66	18	------	84
5.	BLOCK - F	126	------	126	126
6.	BLOCK - G	126	------	126	126
7.	BLOCK - H	126	------	126	126
8.	BLOCK - I	70	------	70	70
	TOTAL	834	34	672	868

13	EXISTING FIRE STAIRCASE AREA (TO BE COMPOUND)		80.95
	COMPLETION ALREADY TAKEN AREA	TO BE COMPOUND	
	1210.19	80.95	
14	EXISTING MUMTY AREA (TO BE COMPOUND)		124.75
	COMPLETION ALREADY TAKEN AREA	TO BE COMPOUND	
	250.71	124.75	
15	EXISTING MACHINE ROOM AREA (TO BE COMPOUND)		74.31
	COMPLETION ALREADY TAKEN AREA	TO BE COMPOUND	
	133.60	74.31	

OWNER'S NAME AND SIGNATURE

MR PROVIEW REALTECH PVT LTD, dsharma34@gmail.ocm, 8800556565

ARCHENG'S NAME AND SIGNATURE

ANUJ AGARWAL

CA/96/19603

Signature Not Verified
Digitally signed by Anuj Agarwal
Date: 06 Dec 2023 12:12:54
Designation : Architect

Ghaziabad Development Authority

Signature Not Verified
Digitally signed by Ghaziabad Development Authority
Date: 26 Nov 2023 15:15:16
Reason: SelfAttested
Location: Ghaziabad

Building Plan Application Number

GDA/LD/23-24/1128

Sanctioned On

26 Nov 2023

Valid Till

05 Dec 2028

Approved By

Chandra Prakash Tripathi (Chief Architect and Town Planner/Additional :

Examined By

Bhagwan Das Maurya (Junior engineer)

S K Srivastava (Assistant Engineer)

Bhagwan Das Maurya (Junior engineer)

S K Srivastava (Assistant Engineer)

Rajeev Ratan Shah (Town Planner/ Executive engineer)

Chandra Prakash Tripathi (Chief Architect and Town Planner/Additional :

Total Plot Area: -	5422.90	Total FAR Area: -	00
Total Coverage Area: -	00	Total BUA Area: -	00

Note: - 1) This drawing is prepared as per the current prevailing Building Bye Laws.
2) If Map sanctioned is used for purpose anything other than stated in application will lead to rejection of Map.

ISO_A0_(841.00_x_1189.00_MM)

The correctness and accuracy of Proposal information and drawing is a responsibility of PORowner. Accuracy of Scrutiny Report is subject to accuracy of end-user provided data, 3rd party software/hardware/services, etc. SoftTech Engineers Ltd. is not liable for any damages which may arise from use, or inability to use the Application. Texts printed in 'Italics' and 'Blue' color are user inputs, which are not verified and not generated by scrutiny software.