PRODUCED BY AN AUTODESK EDUCATIONAL PRODUCT

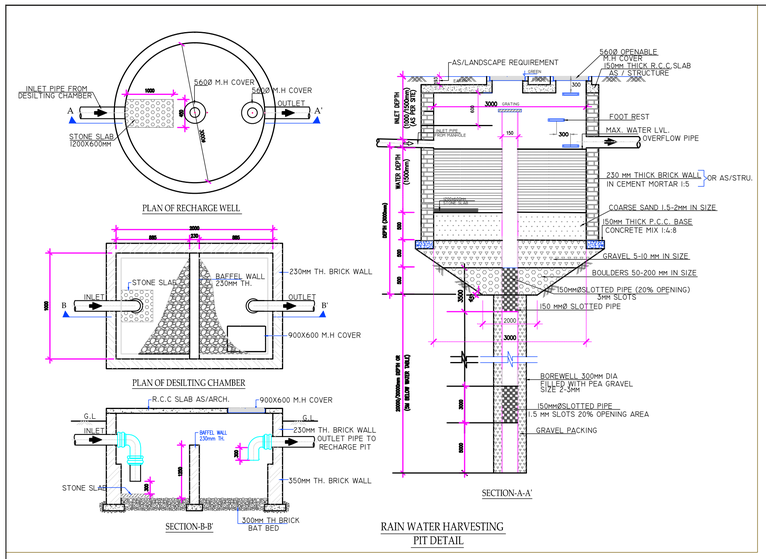

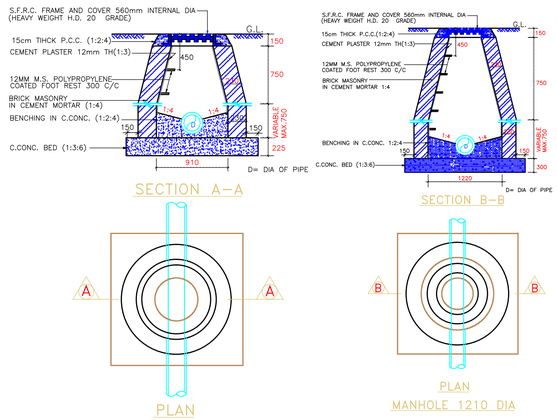

LEGEND

SYMBOL	DESCRIPTION
	EXTERNAL SEWER LINE
	EXTERNAL STROM LINE
	COLD WATER SUPPLY LINE
	FLUSHING WATER SUPPLY LINE
	ESTERNAL FIRE HYDRANT RING
	GARDEN HYDRANT RING
MH	EXTERNAL SEWER LINE MANHOLE
SMH	EXTERNAL STROM LINE MANHOLE
FH	FIRE HYDRANT (80ø TO FH)
GH	GARDENT HYDRANT (25ø TO GH)

PLUMBING LEGEND:-

	RAIN WATER HARVESTING
SPACE FOR SOLAR PANEL	SPACE FOR SOLAR PANEL

WATER TANK BELOW

S.T.P BELOW

E S S

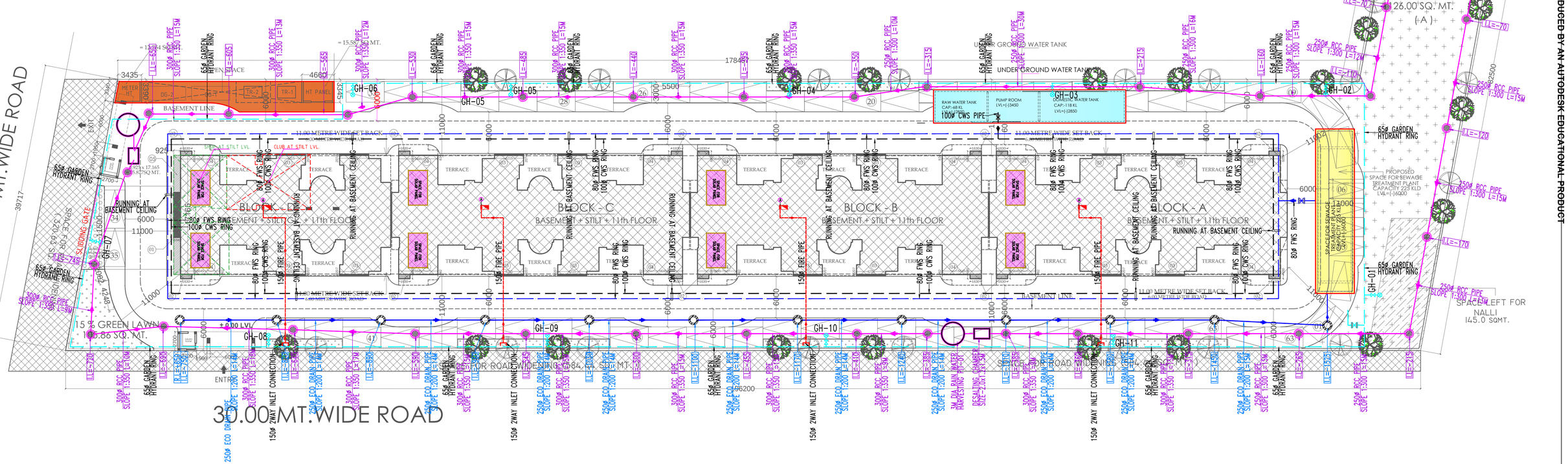

PROJECT:

DRAWINGS FOR AFFORDABLE GROUP HOUSING AT KHASRA NO. 915,945 & 946 VILLAGE NOORNAGAR PARGANA LONI GHAZIABAD (U.P.)

OWNER:

M/s. K. D. P. BUILDWELL P (LTD.)
THROUGH- MR. MANOJ GOEL

DRAWING TITLE : PLAN OF DEVELOPMENT OF WORK

OWNER'S SIGN

ARCHITECT'S SIGN.

Design Studio
ANUJ AGARWAL ARCHITECTS
OFFICE:- A-244 KAUSHAMBI GHAZIABAD (U.P.)
Ph:-0120 - 6454182 / 84, 4165716, TEL. FAX - 2773592
e-mail : arch.anujagarwal@gmail.com

SCALE

DATE -

DRG. No. DG-02

PRODUCED BY AN AUTODESK EDUCATIONAL PRODUCT

PRODUCED BY AN AUTODESK EDUCATIONAL PRODUCT

PRODUCED BY AN AUTODESK EDUCATIONAL PRODUCT