Project Title :PROPOSED REVISED LAYOUT WITH MINOR CORRECTION AGAINST PREVIOUS SANCTION LAYOUT PERMIT NO. 2018081816272281O DATED- 07-03-2019 (GHAILA TOWNSHIP) Village: Ghaila & Alinagar, Lucknow for Shalimar KSMB Village Ghaila, Khasara No:- 2,3,4,5,6,7,12,13,14,23,24,25,27,31,32,87,88,89,89/1594,90Ka,91Ka,91Ga,91Gha,92,93,94,95,96,97,108,110,114,115,115/1553,116,117,119Ka,120,121Ka,121Kha,122,123,124Ka,124Kha,181,182,183,184,191,192,195,195/1546,200,201,202,203,204,206,207,209,212,213,214,215,216,217,219,230,231,234,235,236,239,240Sa,Village Ali Nagar, Khasara No:- 5,23,25,26,27,29,35,36,37,39,41,45,46,48(PREVIOUS SANCTIONED PLOTTED RESI DEVELOPMENT / PLOTTED HOUSING/03660/LDA/LD/20-21/2742/29112021 DATED 11 MAR 2022)

DESCRIPTION

CHANGES MARKED

UPDATED SANCTION LAYOUT PLAN

SITE PLAN
(Scale - 1:1500)

Project	GHAILA TOWNSHIP GHAILA & ALINAGAR
Drawing Title	SANCTION PLAN - SHEET 02
Drawn By	Checked By / Approved By
Date	Scale

Project Title :PROPOSED REVISED SITE PLAN (GHAILA TOWNSHIP) Village: Ghaila & Alinagar, Lucknow for Shalimar KSMB Village Ghaila, Khasara No:- 2,3,4,5,6,7,12,13,14,23,24,25,27,31,32,87,88,89,89/1594,90Ka,91Ka,91Kha,91Ga,91Gha,92,93,94,95,96,97,108,110,114,115,115/1553,116,117,119Ka,120,121Ka,121Kha,122,123,124Ka,124Kha,181,182,183,184,191,192,195,195/1546,200,201,202,203,204,206,207,209,212,213,214,215,216,217,219,230,231,234,235,236,239,240Sa,Village Ali Nagar, Khasara No:- 5,23,25,26,27,29,35,36,37,39,41,45,46,48

File No	LDA/LD/D 2/2027	Sheet	1
Extension Date	2022-08-17	Scale	1:150
Date Created	2022-02-17 LDA/LD/D 2/2027 LDA/LD/D 2/2027		
Project Type	Residential		
Authority	Lucknow Development Authority	Plot Use	Residential
Authority Sub Category	Housing	Plot Use Sub Category	Plotted Resi development / Plotter housing
Authority Name	Lucknow Development Authority (LDA)	Residential Plot / Basic Resi Plot	
Zone/Ward	Raipur	Land Use Zone	Residential use Zone
Project Type	Layout Development	Land Sub Use Zone	Residential Zone
Project Sub Type	Plotted Development NEW	Land Type	Gair
Site Area	124717.05		
Development Area	Undeveloped Area		
Site Address	Village Ghaila & Alinagar		
Zone	Lucknow		
Site Address	Village Ghaila & Tehsil-Lucknow,Village Ghaila		
District	Lucknow		
Area of Plot (as per revenue record)	Sq.Mts.		
Document Area			37,000.00
Area of Plot (calculated)			124717.05
Area of Plot Considered			124717.05
Deduction for			
Road/Road width			0.00
Society name/name			0.00
Total a / c			124717.05
Net Area of Plot - (C-(B)) (A-(F))			124717.05
Plot Area For Coverage			124717.05
Plot Area For FAR			124717.05
Total Green Area			0.00
Total Plot / Parks			0.00
Green Belt / Strip area %	Total Built up area permissible at		
Permissible Coverage area %			0.00
Proposed Coverage Area %			0.00
Total Prop. Coverage Area %			0.00
Balance coverage area %			0.00

	Proposed Built up	Existing Built up	Proposed F.A.R.	Existing F.A.R.
	Residential			
Total Area	0.00	0.00	0.00	0.00
Total FSI Area				0.00
Proposed FAR Area				0.00
Proposed F.A.R. selected				0.00
Transferred Development Rights (TDR) Area				0.00

Land use analysis/Area Distribution (Table R1)

Area covered under	Proposed Area in sq.	Percentage(%)
Residential use	0.00	0.00
Road Area	37416.15	30.00
Other Area	87300.90	70.00
Total site layout	124717.05	100.00

Individual Plot Area

Plot No.	Area(in Sqm)	Plot Area		Frontage		Coverage		FSI Area	
		Reqd.	Prop.	Reqd.	Prop.	Reqd.	Prop.	Reqd.	Prop.
GROUP HOUSING 1	4408.- 2000.00	5000.00	-	36.00	0.00	0.00	0.00	0.00	0.00

Proposed Dwelling Calculation

Plot Number	Use	Subuse	Range	Nos.	Pers. / Unit/Flat	Pers. / Person/Cot	Total Persons/Flat	Total
Group Housing								
GROUP HOUSING 1	Residential	Group Housing	Inner area	1	250	5	250.00	250
Grand Total								250

Individual Plot Setback

Plot No.	Area(in Sq.)	Depths Front		Depths Rear		Side1		Side2		Rear		Coverage	
		Reqd.	Prop.	Reqd.	Prop.	Reqd.	Prop.	Reqd.	Prop.	Reqd.	Prop.	Reqd.	Prop.
GROUP HOUSING 1	10.5" / 4408.- 2000.00	0.00	-	-	-	-	-	0.00	-	0.00	-	0.00	0.00

Tenements/Dwelling Check

Plot Number	No Of Tenements			No Of Rooms		
density	Reqd	Perm	Prop	Reqd	Perm	Prop
1000/ha	-	50	250	-	250	250

Tree Details (Table 29)

Plot	Name	Nos Of Trees	
		Reqd	Prop
10.5"	Tree	-	0

Color Notes

COLOR INDEX

- PROPERTY BOUNDARY
- ABUTTING ROAD
- PROPOSED CONSTRUCTION
- ROAD WIDENING
- ROAD ALIGNMENT (ROAD WIDENING AREA)
- FUTURE T.P SCHEME DEDUCTION AREA
- EXISTING (To be retained)
- EXISTING (To be demolished)

Total Plot Area :- 124717.05	Total FAR Area :- .0
Total Coverage Area :- .0	Total BUA Area :- .0

OWNER'S NAME AND SIGNATURE	
SHALIMAR KSMB PROJECT,ARCHITECT@SHALIMAR.ORG,7310188003	
ARCHITECT'S NAME AND SIGNATURE	STRUCTURE ENGINEER
SADHANAND KUMAR CA/2011/93868 Flat No. 102, Ground Floor, Gitanjali Apartment, Near Lal Kothi, Tonk Road, Jaipur-302015	
	Lucknow Development Authority
	Site Approved Subject to Court Order/Orders Subject to Court Case Pending
Building Plan Application Number	
LDA/LD/D2/-2/4027?	
Sanctioned On	
14 Jul 2022	
valid Till	
17 Jul 2027	
Approved By	
Vice Chairman (Vice Chairman)	
Examined By	
Rajesh Sharma (Junior engineer)	
Shiv Kumar (Junior engineer)	
Nagendra Singh (Assistant Engineer)	
Bhupendra Veer Singh (Executive engineer)	
Nitin Misal (Chief Town Planner)	
Pawan kumar Gangwar (Secretary)	

Note: - 1) This drawing is prepared as per the current prevailing Building Bye Laws.
2) If Map sanctioned is used for purpose anything other than stated in application will lead to rejection of Map.

DO_full_bleed_A4x3_210x297.00_x_2378.00_MM)

The correctness and accuracy of Proposal Information and drawing is a responsibility of PlotViewer. Accuracy of Society Report is subject to accuracy of end-user provided data. 3rd party software/hardware/services, etc. SMPoint Engineers Ltd. is not liable for any damages which may result from use, or inability to use the Application. Tech.printer's Native and Blue color are user inputs, which are not defined and not generated by security software.

Project Title :PROPOSED REVISED LAYOUT WITH MINOR CORRECTION AGAINST PREVIOUS SANCTION LAYOUT PERMIT NO. 2018081816272281O DATED- 07-03-2019 (GHAILA TOWNSHIP) Village: Ghaila & Alinagar, Lucknow for Shalimar KSMB Village Ghaila, Khasra No:- 2,3,4,5,6,7,12,13,14,23,24,25,27,31,32,87,88,89,89/1594,90Ka,91Ka,91Kha,91Ga,91Gha,92,93,94,95,96,97,108,110,114,115,115/1553,116,117,119Ka,120,121Ka,121Kha,122,123,124Ka,124Kha,181,182,183,184,191,192,195,195/1546,200,201,202,203,204,206,207,209,212,213,214,215,216,217,219,230,231,234,235,236,239,240Sa,Village Ali Nagar, Khasara No:- 5,23,25,26,27,29,35,36,37,39,41,45,46,48(PREVIOUS SANCTIONED PLOTTED RESI DEVELOPMENT / PLOTTED HOUSING03660/LDA/LD/20-21/2742/29112021 DATED 11 MAR 2022)

Title	LDA/LD/20-21/2277	Sheet	2
Drawn Date	2022-06-13	Scale	1:150

PLOT B

CLUSTER NAME	PLOT NO.	PLOT DIMENSION		PLOT AREA (sqmt)		SETBACK (MT.) FRONT	REAR	SIDE	SIDE
A	1	11.013m x 19.86m	1	217.85	217.85	3.0	3.0	3.0	-
	2	11.169m x 19.86m	1	201.53	201.53	3.0	3.0	3.0	-
	3	8.9m x 19.672m	1	176.79	176.79	3.0	3.0	-	-
	4	8.9m x 19.632m	1	174.92	174.92	3.0	3.0	-	-
	5	8.680m x 19.383m	1	168.24	168.2444	3.0	3.0	3.0	-
			5		0				
B	1	11.465m x 14.394m	1	170.66	170.66	3.0	3.0	3.0	-
	2	11.610m x 14.394m	1	154.93	154.93	3.0	3.0	-	-
	3	9.976m x 23.136m	1	230.82	230.82	3.0	3.0	3.0	-
	4	9m x 22.672m	1	206.79	206.79	3.0	3.0	-	-
	5	9m x 22.063m	1	202.6	202.6	3.0	3.0	-	-
	6	9m x 21.453m	1	195.82	195.82	3.0	3.0	-	-
	7	9m x 20.843m	1	190.33	190.33	3.0	3.0	-	
	8	9m x 20.234m	1	184.85	184.85	3.0	3.0	-	
	9	9m x 19.624m	1	179.36	179.36	3.0	3.0	-	
	10-17	8.3m x 18m	8	149.4	1195.2	3.0	3.0	-	-
	18	7.825m x 18m	1	157.3	157.3	3.0	3.0	3.0	-
			18		0				
C	1	12.06+10.44/2X12.50	1	140.62	140.62	2.0	2.0	2.0	-
	2	7.65m x 12.50m	1	95.62	95.62	2.0	2.0	-	-
	3	7.65m x 12.50m	1	95.62	95.62	2.0	2.0	-	-
	4A,4B	7.65M x 12.50m	2	95.62	191.24	2.0	2.0		
	5-7	9.9m x 20.5m	3	202.95	608.85	3.0	3.0	-	-
	8	9.493m x 19.716m	1	181.6	181.6	3.0	3.0	3.0	-
	9	10.195m x 18.764m	1	168.81	168.81	3.0	3.0	-	-
	10	10.5m x 17.799m	1	181.64	181.64	3.0	3.0	-	-
	11	10.5m x 16.8m	1	176.35	176.35	3.0	3.0	-	-
	12-14	8.850m x 16.8m	3	148.68	446.04	3.0	3.0	-	-
	15	11.5m x 16.8m	1	181.06	181.06	3.0	3.0	3.0	-
			16		0				
D	1	13.0m x 17.5m	1	174.73	174.73	3.0	3.0	3.0	
	2	10m x 17.5m	1	109.92	109.92	3.0	3.0	-	-
	3-8	8.765m x 13.120m	6	115	690	3.0	3.0	-	-
	9	8.765m x 13.120m	1	115	115	3.0	3.0	3.0	-
			9		0				
E	1	8.78m x 14.23m	1	125	125	2.0	2.0	2.0	-
	2-3	8.08m x 14.23m	2	115	230	2.0	2.0	-	-
	4	11.46m x 16.86m	1	149.49	149.49	2.0	2.0	2.0	-
	5	8.5m x 16.86m	1	143.31	143.31	2.0	2.0	-	-
	6	8.5m x 16.86m	1	143.31	143.31	2.0	2.0	2.0	-
	7-8	8.08m x 14.23m	2	115	230	2.0	2.0	-	-
	9	8.78m x 14.23m	1	125	125	2.0	2.0	2.0	-
			9		0				
F	1	8.78m x 14.23m	1	125	125	2.0	2.0	2.0	-
	2-4	8.08m x 14.23m	3	115	345	2.0	2.0	-	-
	5-6	8.78m x 14.23m	2	125	250	2.0	2.0	2.0	-
	7-9	8.08m x 14.23m	3	115	345	2.0	2.0	-	-
	10	8.78m x 14.23m	1	125	125	2.0	2.0	2.0	-
			10		0				
G	1	8.78m x 14.23m	1	125	125	2.0	2.0	2.0	-
	2-4	8.08m x 14.23m	3	115	345	2.0	2.0	-	-
	5-6	8.78m x 14.23m	2	125	250	2.0	2.0	2.0	-
	7-9	8.08m x 14.23m	3	115	345	2.0	2.0	-	-
	10	8.78m x 14.23m	1	125	125	2.0	2.0	2.0	-
			10		0				
H	1	8.78m x 14.23m	1	125	125	2.0	2.0	2.0	-
	2-4	8.08m x 14.23m	3	115	345	2.0	2.0	-	-
	5-6	8.78m x 14.23m	2	125	250	2.0	2.0	2.0	-
	7-9	8.08m x 14.23m	3	115	345	2.0	2.0	-	-
	10	8.78m x 14.23m	1	125	125	2.0	2.0	2.0	-
			10		0				
I	1	8.78m x 18.125m	1	159.14	159.14	3.0	3.0	3.0	-
	2-4	8.08m x 18.125m	3	146.45	439.35	3.0	3.0	-	-
	5-6	8.78m x 18.125m	2	159.14	318.28	3.0	3.0	3.0	-
	7-9	8.08m x 18.125m	3	146.45	439.35	3.0	3.0	-	-
	10	8.78m x 18.125m	1	159.14	159.14	3.0	3.0	3.0	-
			10		0				
J	1	16m X 8.567m	1	155.27	155.27	3.0	3.0	3.0	-
	2	10m X 11.021m	1	119	119	3.0	3.0	-	-
	3	10m X 12.737m	1	135.65	135.65	3.0	3.0	-	-
	4	10m X 14.392m	1	152.19	152.19	3.0	3.0	-	-
	5	10m X 16.046m	1	168.22	168.22	3.0	3.0	-	-
	6	10m X 17.54m	1	181.1	181.1	3.0	3.0	-	-
	7	10m X 18.596m	1	190.26	190.26	3.0	3.0	-	-
	8	11.538m X 19.394m	1	249.41	249.41	3.0	3.0	3.0	-
			8		0				
K	1	13m x 11.175m	1	133.96	133.96	3.0	3.0	3.0	-
	2	10m x 11.059m	1	111.17	111.17	3.0	3.0	-	-
	3	10m x 11.085m	1	110.43	110.43	3.0	3.0	-	-
	4	10m x 11.210m	1	111.47	111.47	3.0	3.0	-	-
	5	8.75m x 12.381m	1	117.13	117.13	3.0	3.0	-	-
	6	8.75m x 14.397m	1	116.91	116.91	3.0	3.0	-	-
	7	8.75m x 16.35m	1	134.93	134.93	3.0	3.0	-	-
	8	8.75m x 17.897m	1	149.83	149.83	3.0	3.0	-	-
	9	8.75m x 19.283m	1	162.66	162.66	3.0	3.0	-	-
	10	8.75m x 20.665m	1	174.77	174.77	3.0	3.0	-	-
	11	8.75m x 21.685m	1	185.6	185.6	3.0	3.0	-	-
	12	8.75m x 22.560m	1	193.72	193.72	3.0	3.0	-	-
	13	8.75m x 23.342m	1	200.82	200.82	3.0	3.0	-	-
	14	11.884m x 23.342m	1	280.35	280.35	3.0	3.0	3.0	-
			14						
L	1	15.00m x 10.45m	1	156.75	156.75	3.0	3.0	3.0	-
	2	11.50m x 13.16m	1	151.34	151.34	3.0	3.0	0.0	-
	3	11.50m x 15.20m	1	174.8	174.8	3.0	3.0	0.0	-
	4	11.50m x 17.43m	1	200.44	200.44	3.0	3.0	0.0	-
	5	10..80 m x 19.88 m	1	214.7	214.7	3.0	3.0	3.0	-
	6-9	7.65m X 14.5 m	4	110.92	443.68	2.0	2.0	-	-
	10	10.810+8.43/2x14.50	1	139.49	139.49	2.0	2.0	2.0	-
			10						
			129		18812.5				

PLOT A- ALPHA SECTOR

CLUSTER	PLOT NO.	PLOT DIMENSION	PLOT AREA	SETBACK (MT.) FRONT	REAR	SIDE	SIDE
A	1	12m x 20m	240	3.0	3.0	3.0	-
	2	9m x 20m	180	3.0	3.0	-	-
	3	12m x 20m	240	3.0	3.0	3.0	-
B	1	12m x 20m	240	3.0	3.0	3.0	-
	2-4	9m x 20m	180	3.0	3.0	-	-
	5-6	12m x 20m	240	3.0	3.0	3.0	
	7-8	9m x 20m	180	3.0	3.0	-	
	9	12m x 20m	240	3.0	3.0	3.0	-
C	1	12m x 20m	240	3.0	3.0	3.0	-
	2-6	9m x 20m	180	3.0	3.0	-	
	7	12m x 20m	240	3.0	3.0	3.0	-
D	1	12m x 20m	240.00	3.0	3.0	3.0	-
	2-6	9m x 20m	180.00	3.0	3.0	-	-
	7A,7B,7C,7D	8.32m x 16.5m	137.28	2.0	2.0	-	
	8-10	8.575m x 16.5m	141.49	2.0	2.0	-	
E	1	12m x 20m	240	3.0	3.0	3.0	-
	2-5	9m x 20m	180	3.0	3.0	-	
	6-7	12m x 20m	240	3.0	3.0	3.0	-
	8-11	9m x 20m	180	3.0	3.0	-	-
	12	12m x 20m	240	3.0	3.0	3.0	
F	1	12m x 20m	240	3.0	3.0	3.0	-
	2-5	9m x 20m	180	3.0	3.0	-	-
	6-7	12m x 20m	240	3.0	3.0	3.0	-
	8-11	9m x 20m	180	3.0	3.0	-	-
	12	12m x 20m	240	3.0	3.0	3.0	-
G	1	12m x 20m	240	3.0	3.0	3.0	-
	2	9m x 20m	180	3.0	3.0	-	-
	3	12m x 20m	240	3.0	3.0	3.0	-
H	1	12m x 20m	240	3.0	3.0	3.0	-
	2-3	9m x 20m	180	3.0	3.0	-	-
	4	12m x 20m	240	3.0	3.0	3.0	-
J	1	11.575m x 16.5m	191	2.0	2.0	2.0	-
	2	8.575m x 16.5m	141	2.0	2.0	-	-
	3	11.575m x 16.5m	191	2.0	2.0	2.0	-
J1	1	10.5m x 14m	147	2.0	2.0	2.0	-
	2	10.5m x 14m	147	2.0	2.0	2.0	-
K	1	11.575m x 16.5m	191	2.0	2.0	2.0	-
	2-7	8.575m x 16.5m	141	2.0	2.0	-	-
	8-12	8.575m x 16.5m	141	2.0	2.0	-	-
	13	11.575m x 16.5m	191	2.0	2.0	2.0	-
	14-18	8.575m x 16.5m	141	2.0	2.0	-	-
	19	11.575m x 16.5m	191	2.0	2.0	2.0	
L	1	11.575m x 16.5m	191	2.0	2.0	2.0	-
	2-7	8.575m x 16.5m	141	2.0	2.0	-	-
	8-12	8.575m x 16.5m	141	2.0	2.0	-	-
	13-14	11.575m x 16.5m	191	2.0	2.0	2.0	-
	15-21	8.575m x 16.5m	141	2.0	2.0	-	-
	22-25	8.575m x 16.5m	141	2.0	2.0	-	-
	26	11.575m x 16.5m	191	2.0	2.0	2.0	-
M	1	10.5m x 14.0m	147	2.0	2.0	2.0	-
	2-5	8.5m x 14m	119	2.0	2.0	-	-
	6-8	8.5m x 14m	119	2.0	2.0	-	-
	9	10.5m x 14.0m	147	2.0	2.0	2.0	-
	10	16m x 10.5m	168	2.0	2.0		
	11-14	8.5m x 14m	119	2.0	2.0	-	-
	15	10.5m x 14.0m	147	2.0	2.0	2.0	-
N	1	10.5m x 14.0m	147	2.0	2.0	2.0	-
	2-5	8.5m x 14m	119	2.0	2.0	-	-
	6-8	8.5m x 14m	119	2.0	2.0	-	-
	9-10	10.5m x 14.0m	147	2.0	2.0	2.0	-
	11-15	8.5m x 14m	119	2.0	2.0	-	-
	16-17	8.5m x 14m	119	2.0	2.0	-	-
	18	10.5m x 14.0m	147	2.0	2.0	2.0	-
P	1	10.5m x 14.0m	147	2.0	2.0	2.0	-
	2-6	8.5m x 14m	119	2.0	2.0	-	-
	7-9	8.5m x 14m	119	2.0	2.0	-	-
	10	10.5m x 14.0m	147	2.0	2.0	2.0	-
TOTAL PLOTS - 156 NO.							

7 VILLAS
AREA: 973.59 SQ.MT.

SITE AREA PROGRAM

DESCRIPTION	AREA DISTRIBUTION (SQ. MT.)	(ACRE)	TOTAL (ACRES)	PERCENTAGE	
SITE AREA	313955.4		77.58		
GOOL AREA	12810.00	3.17			
CHAK ROAD	3707.52	0.92			
KUCHHI NAALI AREA	5032.47	1.24			
TOTAL UNUSED AREA			5.33		
TOTAL SITE AREA	292405.41		72.25		
LAND LEFT FOR ROAD WIDENING(51.9M)	2927.73	0.72			
GREEN BELT (50M)	9452.41	2.34			
GREEN BELT (100M)	14897.67	3.68			
TOTAL LAND FOR ROAD WIDENING AND GREEN BELT	27277.81		6.74		
NET SITE AREA	265127.60		65.51		
GREEN AND PARK AREAS	40550.61	10.02		15.29%	
TOTAL AREA FOR ROW HOUSES/ VILLAS	99477.30	24.58		37.52%	
GROUP HOUSING PLOT	39426.38	9.74		14.87%	
GROUP HOUSING 2	10336.12	2.55		3.90%	
TOTAL AREA FOR RESIDENTIAL	149239.80		36.88		56.29%
L.I.G./L.I.G GOUSING PLOT	9311.00	2.30		3.51%	
SCHOOL+ AGANWADI	4341.00	1.07		1.64%	
NURSERY SCHOOL	521.62	0.13		0.20%	
COMMUNITY CENTER	4924.16	1.22		1.86%	
CONVENIENCE SHOPPING	2076.85	0.51		0.71%	
SUB-POST OFFICE	110.40	0.03		0.04%	
HEALTH CARE CENTER	827.47	0.20		0.31%	
GARBAGE DISPOSAL	90.00	0.02		0.03%	
11KVA ELECTRIC SUBSTATION	501.78	0.12		0.19%	
CHABUTRA	45.00	0.01		0.02%	
TOTAL AREA FOR ROADS	52587.91	12.99		19.83%	
		77.58		100%	

TABLE OF IMPACTED AREA FOR CHARGES

DESCRIPTION	AREA	NO OF PLOTS	TOTAL AREA
GROUP HOUSING -2	10336.12	1	10336.12
Added Plot			
Plot A Alpha Sector			
7a.7b,7c,7d	137.28	4	549.12
Plot B			
Block L			
Plot 01	156.75	1	156.75
Plot 02	151.34	1	151.34
Plot 06-09	110.92	4	443.68
Plot 10	139.49	1	139.49
Block C			
Plot 2,3,4a,4b	95.62	4	382.48
Plot 01	140.62	1	140.62
School & Aaganbadi	4341.00	1	4341
		18	16640.6

REVISED PLOT DISTRIBUTION AND POPULATION PROJECTION

AREA(SQ. MT.)	NO. OF PLOTS	PERMISSIBLE NO. OF UNITS	PERSON /UNIT	POPULATION
0-100	143	143		
101-150	298	298		
151-200	165	165		
201-250	86	86		
251-300	5	5		
301-500	0	0		
TOTAL	697	697	5	3485
GROUP HOUSING	1	302	5	1510
Ghroup Housing 2	1	220	5	1100
		1219		
L.I.G. HOUSING		122	5	610
E.W.S. HOUSING		122	5	610
TOTAL POPULATION				7315

THIRD SANCTION AREA

OWNER'S NAME AND SIGNATURE
SHALIMAR KSMB
PROJECT,APOINTED TO(SHALIMAR ORs) TH19/18803

ARCHITECT'S NAME AND SIGNATURE | STRUCTURE ENGINEER
SADHANAD KUMAR
CA/2011/50808
Flat No. 102, Ground Floor,
Ashok Vihar Phase-I,
Sector-3, Rohini,
Delhi-110052

Lucknow Development Authority

Building Plan Application Number
LDA/LD/21-2/0277
Sanctioned On:
14 Jul 2022
Valid Till:
17 Jul 2027
Approved By:
Vice Chairman (Vice Chairman)
Examined By:
Rajesh Sharma (Junior engineer)
Shiv Kumar (Junior engineer)
Nagendra Singh (Assistant Engineer)
Bhupendra Veer Singh (Executive engineer)
Nitin Mittal (Chief Town Planner)
Pawan kumar Gangwar (Secretary)

Total Plot Area -	12417.05	Total FAR Area -	.0
Total Coverage Area -	.0	Total BUA Area -	.0

Note: - 1) This drawing is prepared as per the current prevailing Building Bye Laws.
2) If Map sanctioned is used for purpose anything other than stated in application will lead to rejection of Map.

ISO_full_bleed_4A0_(1682.00_x_2378.00_MM)

The correctness and accuracy of Proposed Information and drawing is a responsibility of PO/Owner. Accuracy of Scrutiny Report is subject to accuracy of end-user provided data. 3rd party software/hardware/services, etc. SoftCraft Engineers Ltd. is not liable for any damages which may arise from use, or inability to use the Application. Tools printed in Tabloid and Blue/ Color are user inputs, which are not verified and not generated by scrutiny software.

Project Title :PROPOSED REVISED LAYOUT WITH MINOR CORRECTION AGAINST PREVIOUS SANCTION LAYOUT PERMIT NO. 2018081816272280 DATED- 07-03-2019 (GHAILA TOWNSHIP) Village: Ghaila & Alinagar, Lucknow for Shalimar KSMB Village Ghaila, Khasra No:- 2,3,4,5,6,7,12,13,14,23,24,25,27,31,32,87,88,89,89/1594,90Ka,91Ka,91Kha,91Ga,91Gha,92,93,94,95,96,97,108,110,114,115,115/1553,116,117,119Ka,120,121Ka,121Kha,122,123,124Ka,124Kha,181,182,183,184,191,192,195,195/1546,200,201,202,203,204,206,207,209,212,213,214,215,216,217,219,230,231,234,235,236,239,240Sa,Village Ali Nagar, Khasara No:- 5,23,25,26,27,29,35,36,37,39,41,45,46,48(PREVIOUS SANCTIONED PLOTTED RESI DEVELOPMENT / PLOTTED HOUSING/03660/LDA/LD/20-21/2742/29112021 DATED 11 MAR 2022)

No.	LDA/LD/22-23/027	Sheet	3
Sheet Date	2022-06-13	Scale	1:150

PLOT - C

CLUSTER	PLOT NO.	PLOT	PLOT AREA	SETBACK (MT.)			
				FRONT	REAR	SIDE	SIDE
A	1	11.6m x 18m	208.80	3.0	3.0	3.0	-
	2-3	8.575m x 18m	154.35	3.0	3.0	-	
	4-6	11.6m x 18m	208.80	3.0	3.0	3.0	-
B	1	11.6m x 18m	208.80	3.0	3.0	3.0	-
	2-4	8.575m x 18m	154.35	3.0	3.0	-	-
	5	11.6m x 18m	208.80	3.0	3.0	3.0	-
C	1	11.6m x 18m	208.80	3.0	3.0	3.0	-
	2-8	8.575m x 18m	154.35	3.0	3.0	-	-
	9-10	11.6m x 18m	208.80	3.0	3.0	3.0	-
	11-17	8.575m x 18m	154.35	3.0	3.0	-	-
	18	11.6m x 18m	208.80	3.0	3.0	3.0	-
D	1	11.6m x 18m	208.80	3.0	3.0	3.0	-
	2-11	8.575m x 18m	154.35	3.0	3.0	-	-
	12	11.6m x 18m	208.80	3.0	3.0	3.0	-
E	1	11.6m x 18m	208.80	3.0	3.0	3.0	-
	2-3	8.575m x 18m	154.35	3.0	3.0		
	4	11m x 11.88m	130.68	2.0	2.0		
	5	11m x 11.88m	130.68	2.0	2.0		
F	1	11.6m x 18m	208.80	3.0	3.0	3.0	-
	2-4	8.575m x 18m	154.35	3.0	3.0		
	5-6	11.6m x 18m	208.80	3.0	3.0	3.0	-
	7-14	8.575m x 18m	154.35	3.0	3.0	3.0	-
G	1	11.6m x 18m	208.80	3.0	3.0	3.0	
	2-4	8.575m x 18m	154.35	3.0	3.0		
	5	11.6m x 18m	208.80	3.0	3.0		
	6	15m x 10.5m	157.05	3.0			
H	1	11.6m x 18m	208.80	3.0	3.0	3.0	-
	2-4	8.575m x 18m	154.35	3.0	3.0	-	-
	5	11.6m x 18m	208.80	3.0	3.0	3.0	-
	6	15m x 11.5m	172.50	3.0			
TOTAL PLOTS - 72 NO.							

PLOT A- ALPHA SECTOR

CLUSTER	PLOT NO.	PLOT	PLOT AREA	SETBACK (MT.)			
				FRONT	REAR	SIDE	SIDE
A	1	12m x 20m	240	3.0	3.0	3.0	-
	2	9m x 20m	180	3.0	3.0	-	-
	3	12m x 20m	240	3.0	3.0	3.0	-
B	1	12m x 20m	240	3.0	3.0	3.0	-
	2-4	9m x 20m	180	3.0	3.0	-	-
	5-6	12m x 20m	240	3.0	3.0	3.0	-
	7-8	9m x 20m	180	3.0	3.0	-	-
	9	12m x 20m	240	3.0	3.0	3.0	-
C	1	12m x 20m	240	3.0	3.0	3.0	-
	2-6	9m x 20m	180	3.0	3.0	-	-
	7	12m x 20m	240	3.0	3.0	3.0	-
D	1	12m x 20m	240	3.0	3.0	3.0	-
	2-8	9m x 20m	180	3.0	3.0	-	-
		12m x 20m	240	3.0	3.0	3.0	-
	9-10	8.575m x 16.5m	141.97	3.0	3.0	-	-
E	1	12m x 20m	240	3.0	3.0	3.0	
	2-5	9m x 20m	180	3.0	3.0	-	-
	6-7	12m x 20m	240	3.0	3.0	3.0	
	8-11	9m x 20m	180	3.0	3.0	-	-
	12	12m x 20m	240	3.0	3.0	3.0	
F	1	12m x 20m	240	3.0	3.0	3.0	-
	2-5	9m x 20m	180	3.0	3.0	-	-
	6-7	12m x 20m	240	3.0	3.0	3.0	-
	8-11	9m x 20m	180	3.0	3.0	-	-
	12	12m x 20m	240	3.0	3.0	3.0	-
G	1	12m x 20m	240	3.0	3.0	3.0	-
	2-3	9m x 20m	180	3.0	3.0	-	-
	4	12m x 20m	240	3.0	3.0	3.0	-
H	1	12m x 20m	240	3.0	3.0	3.0	-
	2-3	9m x 20m	180	3.0	3.0	-	-
	4	12m x 20m	240	3.0	3.0	3.0	-
J	1	11.575m x 16.5m	191	2.0	2.0	2.0	
	2	8.575m x 16.5m	141	2.0	2.0	2.0	
	3	11.575m x 16.5m	191	2.0	2.0	2.0	
J1	1	10.5m x 14m	147	2.0	2.0	2.0	
	2	10.5m x 14m	147	2.0	2.0	2.0	
K	1	11.575m x 16.5m	191	2.0	2.0	2.0	
	2-7	8.575m x 16.5m	141	2.0	2.0	2.0	-
	8-12	8.575m x 16.5m	141	2.0	2.0	2.0	-
	13	11.575m x 16.5m	191	2.0	2.0	2.0	2.0
	14-18	8.575m x 16.5m	141	2.0	2.0	2.0	-
	19	11.575m x 16.5m	191	2.0	2.0	2.0	2.0
L	1	11.575m x 16.5m	191	2.0	2.0	2.0	
	2-7	8.575m x 16.5m	141	2.0	2.0	2.0	-
	8-12	8.575m x 16.5m	141	2.0	2.0	2.0	-
	13-14	11.575m x 16.5m	191	2.0	2.0	2.0	-
	15-21	8.575m x 16.5m	141	2.0	2.0	2.0	-
	22,25	8.575m x 16.5m	141	2.0	2.0	2.0	-
	26	11.575m x 16.5m	191	2.0	2.0	2.0	-
M	1	10.5m x 14.0m	147	2.0	2.0	2.0	
	2-5	8.5m x 14m	119	2.0	2.0		
	6-8	8.5m x 14m	119	2.0	2.0	-	
	9	10.5m x 14.0m	147	2.0	2.0	2.0	
	10	16m x 10.5m	168	2.0	2.0		
	11-14	8.5m x 14m	119	2.0	2.0		
	15	10.5m x 14.0m	147	2.0	2.0	2.0	
N	1	10.5m x 14.0m	147	2.0	2.0	2.0	-
	2-5	8.5m x 14m	119	2.0	2.0		
	6-8	8.5m x 14m	119	2.0	2.0		
	9-10	10.5m x 14.0m	147	2.0	2.0	2.0	
	11-15	8.5m x 14m	119	2.0	2.0		
	16-17	8.5m x 14m	119	2.0	2.0		
	18	10.5m x 14.0m	147	2.0	2.0	2.0	-
P	1	10.5m x 14.0m	147	2.0	2.0	2.0	-
	2-6	8.5m x 14m	119	2.0	2.0		-
	7-9	8.5m x 14m	119	2.0	2.0		
	10	10.5m x 14.0m	147	2.0	2.0	2.0	-
TOTAL PLOTS - 153 NO.							

PLOT B

CLUSTER NAME	PLOT NO.	PLOT DIMENSION		PLOT AREA (sqmt)	SETBACK (MT.)			
					FRONT	REAR	SIDE	SIDE
A	1	11.013m x 19.66m	1	217.65	217.65	3.0	3.0	3.0
	2	11.165m x 19.66m	1	201.53	201.53	3.0	3.0	3.0
	3	8.9m x 19.672m	1	176.79	176.79	3.0	3.0	-
	4	8.9m x 19.632m	1	174.92	174.92	3.0	3.0	-
	5	8.9682m x 19.363m	1	166.24	166.2444	3.0	3.0	3.0
			5		0			
B	1	11.465m x 14.394m	1	170.66	170.66	3.0	3.0	3.0
	2	11.610m x 14.394m	1	154.03	154.03	3.0	3.0	-
	3	9.976m x 23.138m	1	230.82	230.82	3.0	3.0	3.0
	4	9m x 22.872m	1	205.79	205.79	3.0	3.0	-
	5	9m x 22.663m	1	203.8	203.8	3.0	3.0	-
	6	9m x 21.453m	1	195.82	195.82	3.0	3.0	-
	7	9m x 20.843m	1	190.33	190.33	3.0	3.0	-
	8	9m x 20.234m	1	184.85	184.85	3.0	3.0	-
	9	9m x 19.624m	1	179.36	179.36	3.0	3.0	-
	10-17	8.3m x 18m	8	149.4	1195.2	3.0	3.0	
	18	7.825m x 18m	1	157.3	157.3	3.0	3.0	3.0
			18		0			
C	1	13.481m x 14.188m	1	212.12	212.12	3.0	3.0	3.0
	2	11.6m x 18.319m	1	203.08	203.08	3.0	3.0	-
	3	9.9m x 18.995m	1	199.52	199.52	3.0	3.0	-
	4-7	9.9m x 20.5m	4	202.95	811.8	3.0	3.0	-
	8	9.498m x 19.716m	1	181.8	181.8	3.0	3.0	3.0
	9	10.105m x 18.764m	1	188.81	188.81	3.0	3.0	-
	10	10.5m x 17.799m	1	181.64	181.64	3.0	3.0	-
	11	10.5m x 16.8m	1	176.35	176.35	3.0	3.0	-
	12-14	8.850m x 16.8m	3	148.68	446.04	3.0	3.0	-
	15	11.5m x 16.8m	1	181.06	181.06	3.0	3.0	3.0
			15		0			
D	1	13.0m x 17.5m	1	174.73	174.73	3.0	3.0	3.0
	2	10m x 17.5m	1	109.92	109.92	3.0	3.0	
	3-8	8.765m x 13.123m	6	115	690	3.0	3.0	
	9	8.765m x 13.123m	1	115	115	3.0	3.0	3.0
			9		0			
E	1	8.78m x 14.23m	1	125	125	2.0	2.0	2.0
	2-3	8.08m x 14.23m	2	115	230	2.0	2.0	-
	4	11.46m x 16.66m	1	149.49	149.49	2.0	2.0	2.0
	5	8.5m x 16.66m	1	141.51	141.51	2.0	2.0	-
	6	8.5m x 16.66m	1	141.51	141.51	2.0	2.0	2.0
	7-8	8.08m x 14.23m	2	115	230	2.0	2.0	-
	9	8.78m x 14.23m	1	125	125	2.0	2.0	2.0
			9		0			
F	1	8.78m x 14.23m	1	125	125	2.0	2.0	2.0
	2-4	8.08m x 14.23m	3	115	345	2.0	2.0	-
	5-6	8.78m x 14.23m	2	125	250	2.0	2.0	2.0
	7-9	8.08m x 14.23m	3	115	345	2.0	2.0	-
	10	8.78m x 14.23m	1	125	125	2.0	2.0	2.0
			10		0			
G	1	8.78m x 14.23m	1	125	125	2.0	2.0	2.0
	2-4	8.08m x 14.23m	3	115	345	2.0	2.0	-
	5-6	8.78m x 14.23m	2	125	250	2.0	2.0	2.0
	7-9	8.08m x 14.23m	3	115	345	2.0	2.0	-
	10	8.78m x 14.23m	1	125	125	2.0	2.0	2.0
			10		0			
H	1	8.78m x 14.23m	1	125	125	2.0	2.0	2.0
	2-4	8.08m x 14.23m	3	115	345	2.0	2.0	-
	5-6	8.78m x 14.23m	2	125	250	2.0	2.0	2.0
	7-9	8.08m x 14.23m	3	115	345	2.0	2.0	-
	10	8.78m x 14.23m	1	125	125	2.0	2.0	2.0
			10		0			
I	1	8.78m x 18.125m	1	159.14	159.14	3.0	3.0	3.0
	2-4	8.08m x 18.125m	3	146.45	439.35	3.0	3.0	-
	5-6	8.78m x 18.125m	2	159.14	318.28	3.0	3.0	3.0
	7-9	8.08m x 18.125m	3	146.45	439.35	3.0	3.0	-
	10	8.78m x 18.125m	1	159.14	159.14	3.0	3.0	3.0
			10		0			
J	1	16m X 9.567m	1	155.27	155.27	3.0	3.0	3.0
	2	10m X 11.012m	1	119	119	3.0	3.0	-
	3	16m X 13.737m	1	135.85	135.85	3.0	3.0	-
	4	10m X 14.392m	1	152.19	152.19	3.0	3.0	-
	5	10m X 16.048m	1	168.22	168.22	3.0	3.0	-
	6	10m X 17.54m	1	181.1	181.1	3.0	3.0	-
	7	10m X 18.098m	1	190.28	190.28	3.0	3.0	-
	8	11.538m X 19.394m	1	249.41	249.41	3.0	3.0	3.0
			8		0			
K	1	13m x 11.175m	1	133.95	133.95	3.0	3.0	3.0
	2	10m x 11.05m	1	111.17	111.17	3.0	3.0	-
	3	10m x 11.085m	1	110.43	110.43	3.0	3.0	-
	4	10m x 11.232m	1	111.47	111.47	3.0	3.0	-
	5	8.76m x 12.381m	1	117.13	117.13	3.0	3.0	-
	6	8.76m x 16.397m	1	118.91	118.91	3.0	3.0	-
	7	8.76m x 16.36m	1	134.93	134.93	3.0	3.0	-
	8	8.76m x 17.897m	1	149.83	149.83	3.0	3.0	-
	9	8.76m x 19.383m	1	162.66	162.66	3.0	3.0	-
	10	8.76m x 20.685m	1	174.77	174.77	3.0	3.0	-
	11	8.76m x 21.685m	1	185.8	185.8	3.0	3.0	-
	12	8.76m x 22.565m	1	193.72	193.72	3.0	3.0	-
	13	8.76m x 23.342m	1	200.82	200.82	3.0	3.0	-
	14	11.684m x 23.342m	1	280.35	280.35	3.0	3.0	3.0
			118		17423.87			

PLOT DETAIL UNDER REVISION (BLOW UP DETAIL)

PLOT-A BETA SECTOR						
BLOCK-J						
		Mt.	Mt.	SQM.	F.S.B.	R.S.B.	S.S.B.
	1	(8.50 X18.0)-(4.35X2.35/2)		147.89	3	3	
	2	8.5	18	153	3	3	
	3	8.5	18	153	3	3	
	4	8.5	18	153	3	3	
	5	(8.50 X18.0)-(1.72X3.02/2)		150.4	3	3	
BLOCK-Q							
	1	8.5	18	153	3	3	
	2	8.5	18	153	3	3	
	3	8.5	18	152.9	3	3	
BLOCK-N SET BACK CORRECTION							
	1	(15.26+14.27)/2X10.0		147.65	2	2	
	2	(14.27+13.43)/2X8.0		110.8	2	2	
	3	(13.43+11.889)/2X9.91		125.46	2	2	
PLOT-C SUB DIVISION							
BLOCK-E							
	4	11	11.88	130.68	2	2	
	5	11	11.88	130.68	2	2	
PLOT -A ALPHA SECTOR SET BACK CORRECTION							
BLOCK-J							
	1	11.575	16.5	191	3	3	3
	2	8.575	16.5	141	3	3	
	3	11.575	16.5	191	3	3	3
BLOCK-K							
	1	11.575	16.5	191	2	2	2
	2-7	8.575	16.5	141	2	2	
	8-12	8.575	16.5	141	2	2	
	13	11.575	16.5	191	2	2	2
	14-18	8.575	16.5	141	2	2	
	19	11.575	16.5	191	2	2	2
BLOCK-L							
	1	11.575	16.5	191	2	2	2
	2-7	8.575	16.5	141	2	2	
	8-12	8.575	16.5	141	2	2	
	13-14	11.575	16.5	191	2	2	
	15-21	8.575	16.5	141	2	2	
	22-25	8.575	16.5	141	2	2	
	26	11.575	16.5	191	2	2	2
BLOCK-D	PROPOSED PLOT						
	8	8.575	16.5	141.49	3	3	
	9	8.575	16.5	141.49	3	3	
	10	8.575	16.5	141.49	3	3	

REVISED PLOT DISTRIBUTION AND POPULATION PROJECTION

AREA(SQ. MT.)	NO. OF PLOTS	PERMISSIBLE NO. OF UNITS	PERSON /UNIT	POPULATION
0-100	136	136		
101-150	294	294		
151-200	154	154		
201-250	93	93		
251-300	5	5		
301-500	0	0		
TOTAL	682	682	5	3410
GROUP HOUSING	1	302	5	1510
L.I.G. HOUSING		98	5	490
E.W.S. HOUSING		98	5	490
TOTAL POPULATION				5900

AREA DETAILS

SITE AREA PROGRAM

DESCRIPTION	AREA DISTRIBUTION		TOTAL	PERCENTAGE	
	(SQ. MT.)	(ACRE)	(ACRES)		
			77.58		
GOOL AREA	12810.00	3.17			
CHAK ROAD	3707.52	0.92			
SACHR NAAU AREA	5032.47	1.24			
TOTAL UNUSED AREA			5.33		
TOTAL SITE AREA	290283.63		72.25		
LAND LEFT FOR ROAD WIDENING(51.9M)	2927.73	0.72			
GREEN BELT (50M)	9452.41	2.34			
GREEN BELT (100M) UNDER HT. LINE	14897.67	3.68			
TOTAL LAND FOR ROAD WIDENING AND GREEN BELT	27277.81		6.74		
NET SITE AREA	263005.82		65.51		
GREEN AND PARK AREAS	39697.83	9.87			15.09%
TOTAL AREA FOR ROW HOUSES/ VILLAS	98520.86	22.90		37.46%	
GROUP HOUSING PLOT	18557.09	10.26		7.06%	
TOTAL AREA FOR RESIDENTIAL	117077.95		33.16		50.62%
L.I.G. /E.W.S HOUSING PLOT	8501.36	2.10		3.23%	
SCHOOL	4007.99	0.99		1.52%	
NURSERY SCHOOL	543.00	0.13		0.21%	
COMMUNITY CENTER	4924.16	1.16		1.87%	
COMMERCIAL	10336.12	2.67		3.93%	
CONVENIENCE SHOPPING	2826.85	0.62		1.07%	
POLICE STATION WITH RESIDENTIAL FACILITY	1554.35	0.38		0.59%	
GARBAGE DISPOSAL	90.00	0.02		0.03%	
11KVA ELECTRIC SUBSTATION	501.78	0.12		0.19%	
AAGANWADI	530.00	0.12		0.20%	
CHABUTRA	45.00	0.01		0.02%	
TOTAL AREA FOR ROADS	72369.43	13.95		27.52%	
					34.35%
	263005.82	77.63		100.00%	

GREEN AREA

S.NO.	AREA (SQ. MT.)
1	1140.08
2	1737.98
3	553
4	2081.74
5	526.31
6	2031.26
7	491.29
8	1640.35
9	330
10	212.5
11	390
12	195
13	214.45
14	1853
15	1256.95
16	283.07
17	1721.43
18	2486.44
19	168.75
20	168.75
21	4820.12
22	310.53
23	333.08
24	360.12
25	374.7
26	289.79
27	782.95
28	375.03
29	493.15
30	167.85
31	1012.05
32	2170.16
33	305.58
34	413.03
35	756.22
36	893.78
37	940.12
38	313.5
39	630.6
40	2527.46
41	655.07
42	922.62
43	367.97
TOTAL	39697.83

SECOND SANCTION AREA

PLOT A- BETA SECTOR

CLUSTER NAME	PLOT NO.	PLOT DIMENSION		PLOT AREA (sqmt)	SETBACK (MT.)			
					FRONT	REAR	SIDE	SIDE
A	1	11.57m x 17.5m	202.62	3.0	3.0	3.0	-
	2-3	11.57m x 17.5m	202.62	3.0	3.0	3.0	-
	4-5	8.57m x 17.5m	150	2.0	2.0	-	-
	6	11.57m x 17.5m	202.62	3.0	3.0	3.0	-
B	1	11.57m x 17.5m	202.62	3.0	3.0	3.0	-
	2-3	11.57m x 17.5m	202.62	3.0	3.0	3.0	-
	4-5	8.57m x 17.5m	150	2.0	2.0	-	-
	6	11.57m x 17.5m	202.62	3.0	3.0	3.0	-
C	1	11.57m x 17.5m	202.62	3.0	3.0	3.0	-
	2-5	8.57m x 17.5m	150	2.0	2.0	-	-
	6	11.57m x 17.5m	202.62	3.0	3.0	3.0	-
D	1	13m x 17.5m	227.5	3.0	3.0	3.0	-
	2-5	10m x 17.5m	175	3.0	3.0	-	-
	6	13m x 17.5m	226.96	3.0	3.0	3.0	-
E	1	11.665m x 12.5m	144.71	2.0	2.0	2.0	-
	2-4	8.0m x 12.5m	100	1.5	1.5	-	-
	5-6	10m x 12.5m	125	2.0	2.0	2.0	-
	7-8	8.0m x 12.5m	100	1.5	1.5	-	-
	9-10	10m x 12.5m	125	2.0	2.0	2.0	-
	11-12	8.0m x 12.5m	100	1.5	1.5	-	-
	13-14	10m x 12.5m	125	2.0	2.0	2.0	-
	15-17	8.0m x 12.5m	100	1.5	1.5	-	-
	18	10.908m x 12.5m	140.3	2.0	2.0	2.0	-
F	1	13m x 17.5m	227.5	3.0	3.0	3.0	-
	2-4	10m x 17.5m	175	3.0	3.0	-	-
	5	13m x 17.5m	227.5	3.0	3.0	3.0	-
G	1	11.6m x 18m	208	2.0	2.0	3.0	-
	2-6	8.575 x 18m	154	3.0	3.0	-	-
	7-8	11.6m x 18m	208	1.5	1.5	-	-
	9-13	8.575 x 18m	154	2.0	2.0	2.0	-
	14	11.6m x 18m	208	3.0	3.0	-	-
H	1	9.725m x 12.5m	117.5	2.0	2.0	2.0	-
	2-3	8m x 12.5m	100	1.5	1.5	-	-
	4-5	10m x 12.5m	125	2.0	2.0	2.0	-
	6-8	8m x 12.5m	100	1.5	1.5	-	-
	9-11	10m x 12.5m	125	2.0	2.0	2.0	-
	12-13	8m x 12.5m	100	1.5	1.5	-	-
	14-15	8m x 12.5m	100	1.5	1.5	-	-
	16	10.344m x 12.5m	129.3	2.0	2.0	2.0	-
J	1	8.50 m x 18.0 m	147.5	2.0	2.0		
	2	8.5m x 18.0m	153	3.0	3.0		
	3	8.5m x 18.0m	153	3.0	3.0		
	4	8.5m x 18.0m	153	3.0	3.0		
	5	8.5m x 18.0m	150.4	3.0	3.0		
K	1	10.030m x 12.5m	127.77	2.0	2.0	2.0	
	2	8m x 12.5m	100	1.5	1.5		
	3-4	10m x 12.5m	125	2.0	2.0	2.0	
	5-6	8m x 12.5m	100	1.5	1.5		
	7-8	10m x 12.5m	125	2.0	2.0	2.0	
	9-10	8m x 12.5m	100	1.5	1.5		
	11-12	10m x 12.5m	125	2.0	2.0	2.0	
	13	8m x 12.5m	100	1.5	1.5		
	14	11.020m x 12.5m	134.38	2.0	2.0	2.0	
L	1	13m x 17.5m	227.5	3.0	3.0	3.0	
	2-4	10m x 17.5m	175	3.0	3.0		
	5	13m x 17.5m	227.5	3.0	3.0	3.0	
M	1	11.6m x 18m	208	2.0	2.0	3.0	
	2-6	8.575m x 18m	154	3.0	3.0		
	7-8	11.6m x 18m	208	1.5	1.5		
	9-13	8.575m x 18m	154	2.0	2.0		
	14	11.6m x 18m	208	3.0	2.0	3.0	
N	1	10m x 15.25m	147.63	2.0	2.0		
	2	8m x 15.25m	122.01	2.0	2.0		
	3	9.01m x 15.41m	138.86	2.0	2.0		
O	1	10m x 12.5m	125	2.0	2.0	2.0	
	2	8m x 12.5m	100	1.5	1.5		
	3-4	10m x 12.5m	125	2.0	2.0	2.0	
	5-6	8m x 12.5m	100	1.5	1.5		
	7-8	10m x 12.5m	125	2.0	2.0	2.0	
	9-10	8m x 12.5m	100	1.5	1.5		
	11-12	10m x 12.5m	125	2.0	2.0	2.0	
	13	8m x 12.5m	100	1.5	1.5		
	14	10m x 12.5m	125	2.0	2.0	2.0	
P	1	10m x 12.5m	125	2.0	2.0	2.0	
	2-6	8m x 12.5m	100	1.5	1.5		
	7-8	10m x 12.5m	125	2.0	2.0	2.0	
	9-14	8m x 12.5m	100	1.5	1.5		
	15	10m x 12.5m	125	2.0	2.0	2.0	
	16	10m x 12.5m	125	2.0	2.0	3.0	
	17-23	8m x 12.5m	100	1.5	1.5		
	24-26	10m x 12.5m	125	2.0	2.0	2.0	
	27-29	8m x 12.5m	100	1.5	1.5		
	30	10m x 12.5m	125	2.0	2.0	2.0	
Q	1	8.50m x 18.00m	153	3.0	3.0		
	2	8.50m x 18.00m	153	3.0	3.0		

Project Title :PROPOSED REVISED LAYOUT WITH MINOR CORRECTION AGAINST PREVIOUS SANCTION LAYOUT PERMIT NO. 2018061816272281 0 DATED- 07-03-2019 (GHAILA TOWNSHIP) Village: Ghaila & Alinagar, Lucknow for Shalimar KSMB Village Ghaila, Khasra No:- 2,3,4,5,6,7,12,13,14,23,24,25,27,31,32,87,88,89,89/1594,90Ka,91Ka,91Kha,91Ga,91Gha,92,93,94,95,96,97,108,110,114,115,115/1553,116,117,119Ka,120,121Ka,121Kha,122,123,124Ka,124Kha,181,182,183,184,191,192,195,195/1546,200,201,202,203,204,206,207,209,212,213,214,215,216,217,219,230,231,234,235,236,239,240Sa,Village Ali Nagar, Khasara No:- 5,23,25,26,27,29,35,36,37,39,41,45,46,48(PREVIOUS SANCTIONED PLOTTED RESI DEVELOPMENT / PLOTTED HOUSING03660/LDA/LD/20-21/2742/29112021 DATED 11 MAR 2022)

Title	LOKA DOO ERECT	Sheet	-
Sheet Size	700x1189x 2.0	Scale	1:100

SITE PLAN LAND SCPE & SERVICES PLAN

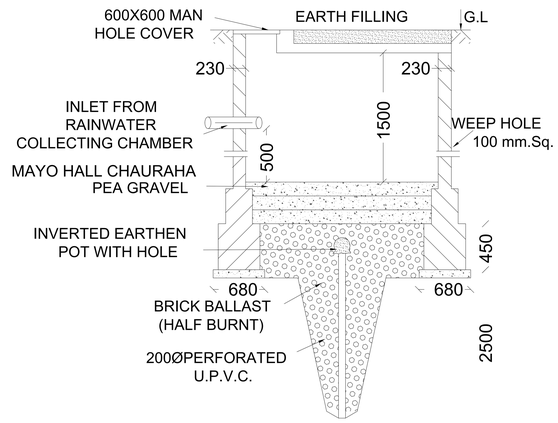

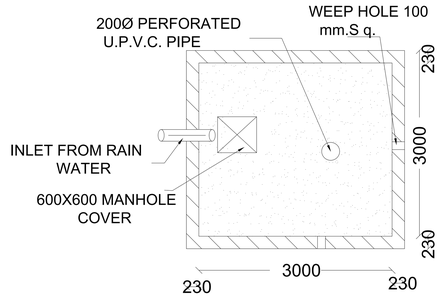

PLAN

WATER RECHARGING PIT

(NOT TO SCALE)

(6.0 MT. DEEP)

Garden Bay

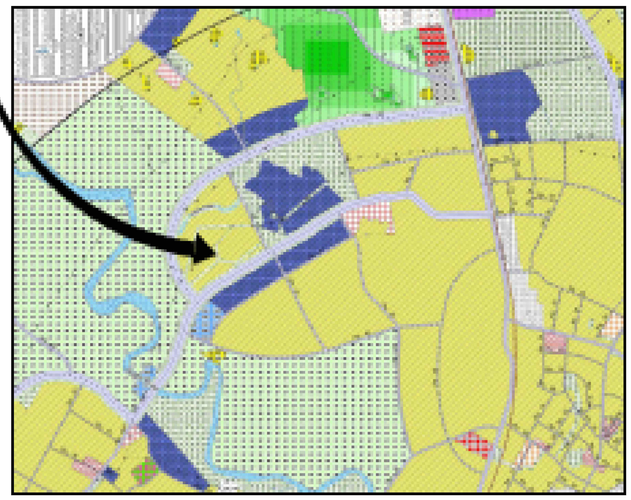

LUCKNOW MASTER PLAN 2031

OWNER'S NAME AND SIGNATURE	
SHALIMAR KSMB PROJECT ARCHITECT@SHALIMAR ORG.TO 9198003	
ARCHITECT'S NAME AND SIGNATURE	STRUCTURE ENGINEER
SADHANAND KUMAR CA/2011/53008 DATE:-05/01/2022 SHALIMAR CORPORATE CENTER EKNATH SAHEED MARG GOMATI NAGAR LUCKNOW 226010	
	Lucknow Development Authority

Building Plan Application Number
LDA/LD/22-2345277

Sanctioned On
14 Jul 2022

Valid Till
15 Jul 2027

Approved By
Vice Chairman (Vice Chairman)

Examined By
Rajesh Sharma (Junior engineer)
Shiv Kumar (Junior engineer)
Nagendra Singh (Assistant Engineer)
Bhupendra Veer Singh (Executive engineer)
Nitin Mital (Chief Town Planner)
Pawan kumar Gangwar (Secretary)

Note: - 1) This drawing is prepared as per the current prevailing Building Bye Laws.
2) If Map sanctioned is used for purpose anything other than stated in application will lead to rejection of Map.

Total Plot Area :-	12417.05	Total FAR Area :-	.0
Total Coverage Area :-	.0	Total BUA Area :-	.0

DCI_1LF_3dwnC_6AD_[1682.00_x_2378.00_MM]

The correctness and accuracy of Proposed Information and drawing is a responsibility of PO/Owner. Accuracy of Scrutiny Report is subject to accuracy of land user provided data. 3rd party software/hardware/errors etc. SMPLR Engineers Ltd. is not liable for any damages which may arise from use. Liability to use the Application, Tools,printer,v Notice and Blue Print are user liable, which are not verified and not generated by scrutiny software.

Project Title :PROPOSED REVISED LAYOUT WITH MINOR CORRECTION AGAINST PREVIOUS SANCTION LAYOUT PERMIT NO. 2018061816272281 0 DATED- 07-03-2019 (GHAILA TOWNSHIP) Village: Ghaila & Alinagar, Lucknow for Shalimar KSMB Village Ghaila, Khasra No:- 2,3,4,5,6,7,12,13,14,23,24,25,27,31,32,87,88,89,89/1594,90Ka,91Ka,91Kha,91Ga,91Gha,92,93,94,95,96,97,108,110,114,115,115/1553,116,117,119Ka,120,121Ka,121Kha,122,123,124Ka,124Kha,181,182,183,184,191,192,195,195/1546,200,201,202,203,204,206,207,209,212,213,214,215,216,217,219,230,231,234,235,236,239,240Sa,Village Ali Nagar, Khasara No:- 5,23,25,26,27,29,35,36,37,39,41,45,46,48(PREVIOUS SANCTIONED PLOTTED RESI DEVELOPMENT / PLOTTED HOUSING/03660/LDA/LD/20-21/2742/29112021 DATED 11 MAR 2022)

Title :	LDA/LD/20-21/2277	Sheet :	1
Sheet Size :	700x1189 (A1)	Scale :	1:150

LEGEND :-

DRAIN

WATER LINE

ELEC.LINE

SEWER LINE

RAIN WATER HARVESTING — R. WH

RAIN WATER HARVESTING — STP 850

Project Title :PROPOSED REVISED LAYOUT WITH MINOR CORRECTION AGAINST PREVIOUS SANCTION LAYOUT PERMIT NO. 2018061816272281 0 DATED- 07-03-2019 (GHAILA TOWNSHIP)
91Kha,91Ga,91Gha,92,93,94,95,96,97,108,110,114,115,115/1553,116,117,119Ka,120,121Ka,
121Kha,122,123,124Ka,124Kha,181,182,183,184,191,192,195,195/1546,200,201,202,203,204,206,207,209,212,213,214,215,216,217,219,230,231,234,235,236,239,240Sa.

Village: Ghaila & Alinagar, Lucknow for Shalimar KSMB

Village Ghaila, Khasara No:- 2,3,4,5,6,7,12,13,14,23,24,25,27,31,32,87,88,89,89/1594,90Ka,91Ka.

Village Ali Nagar, Khasara No:- 5,23,25,26,27,29,35,36,37,39,41,45,46,48

N

Scale : 1:150	Drawn by :	DRAWING TITLE : KHASRA PLAN	
Date : 05.10.2021	Checked by :		
Sheet Size : 700x1189 (A1)	Approved by :		

DIMENSIONS MARK AND SIGNATURE

OWNER NAME
PROJECT ARCHITECT:EGHALIMAR ORG.7701018803

ARCHITECTS NAME AND SIGNATURE | STRUCTURE ENGINEER

SIGNATURE NUMBER
CA/2010/55898
DATE OF ISSUE
VALID UPTO
DATE OF ISSUE
VALID UPTO

Lucknow Development Authority

Building Plan Application Number
LDA/LD/21-2348277

Sanctioned On
14 Jul 2022

Valid Till
17 Jul 2027

Approved By
Vice Chairman (Vice Chairman)

Examined By
Rajesh Sharma (Junior engineer)
Shiv Kumar (Junior engineer)
Nagendra Singh (Assistant Engineer)
Bhupendra Veer Singh (Executive engineer)
Nitin Mittal (Chief Town Planner)
Pawan kumar Gangwar (Secretary)

Note: - 1) This drawing is prepared as per the current prevailing Building Bye Laws.
2) If Map sanctioned is used for purpose anything other than stated in application will lead to rejection of Map.

Total Plot Area : -	124117.05	Total FAR Area : -	0
Total Coverage Area : -	0	Total BUA Area : -	0

ISO_full_bleed_4A0_(1682.00_x_2378.00_MM)

The correctness and accuracy of Proposed Information and drawing is a responsibility of PO/Owner. Accuracy of Scrutiny Report is subject to accuracy of end-user provided data. 3rd party software/hardware/services, etc. SoftCraft Engineers Ltd. is not liable for any damages which may arise from use, or inability to use the Application. Tools printed in Yellow and Blue color are user inputs, which are not verified and not generated by scrutiny software.

Project Title :PROPOSED REVISED LAYOUT WITH MINOR CORRECTION AGAINST PREVIOUS SANCTION LAYOUT PERMIT NO. 2018061816272281O DATED- 07-03-2019 (GHAILA TOWNSHIP) Village: Ghaila & Alinagar, Lucknow for Shalimar KSMB Village Ghaila, Khasra No:- 2,3,4,5,6,7,12,13,14,23,24,25,27,31,32,87,88,89,89/1594,90Ka,91Ka,91Kha,91Ga,91Gha,92,93,94,95,96,97,108,110,114,115,115/1553,116,117,119Ka,120,121Ka,121Kha,122,123,124Ka,124Kha,181,182,183,184,191,192,195,195/1546,200,201,202,203,204,206,207,209,212,213,214,215,216,217,219,230,231,234,235,236,239,240Sa,Village Ali Nagar, Khasara No:- 5,23,25,26,27,29,35,36,37,39,41,45,46,48(PREVIOUS SANCTIONED PLOTTED RESI DEVELOPMENT / PLOTTED HOUSING/03660/LDA/LD/20-21/2742/29112021 DATED 11 MAR 2022)

Title :	LDA/LDD/2022/7	Sheet	3
Drawn Date :	2022-Mar-11	Scale	1:150

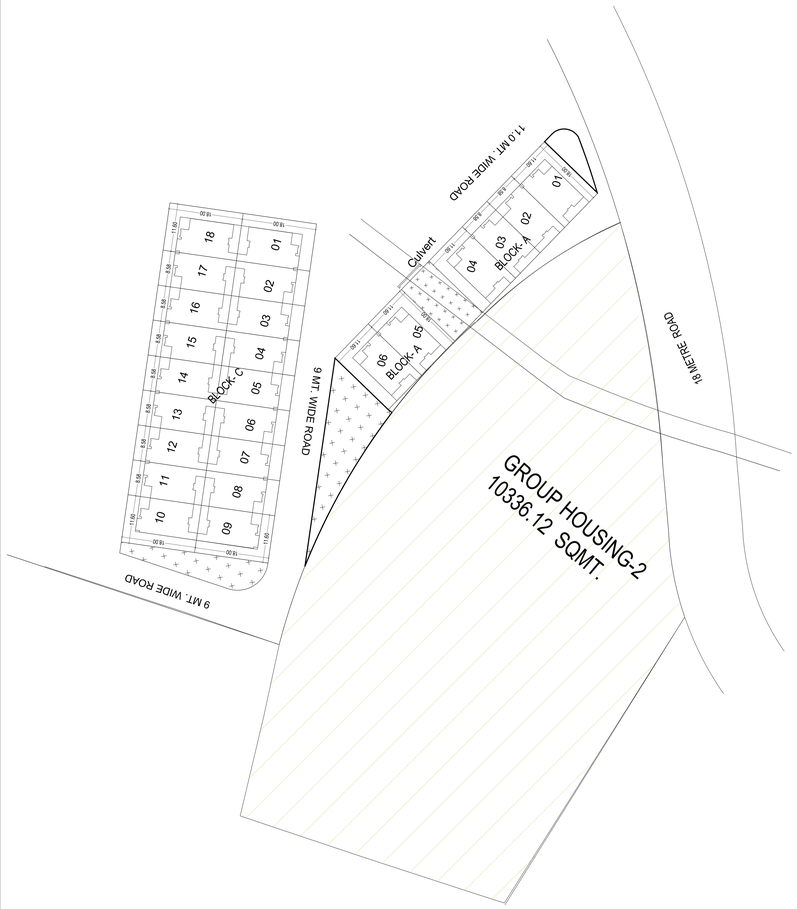

Blowup plan

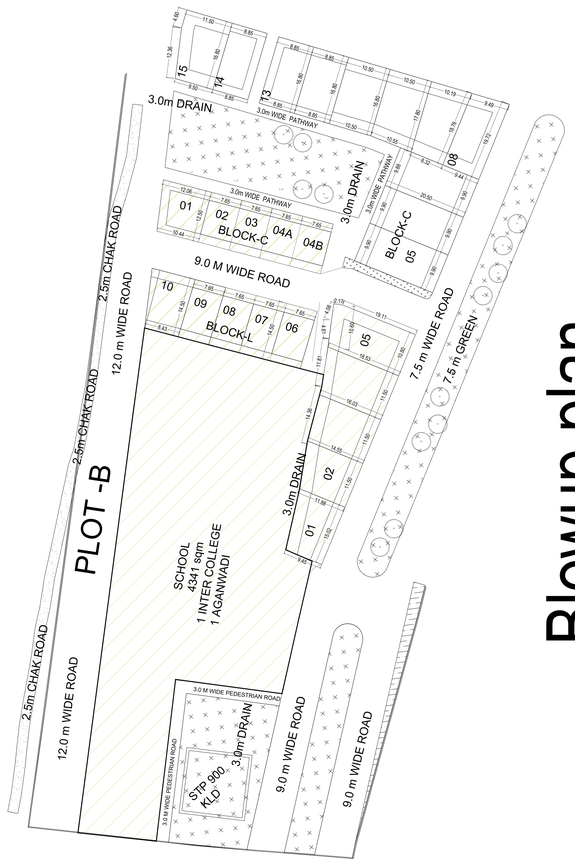

Blowup plan

DESCRIPTION

CHANGES MARKED

DESCRIPTION

CHANGES MARKED

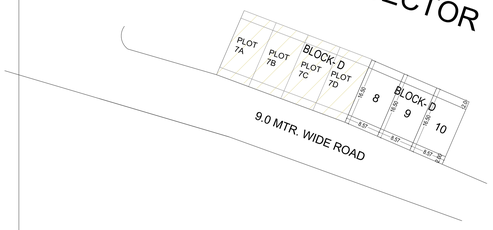

Blowup plan

OWNER'S NAME AND SIGNATURE

SHALIMAR KSMB
PROJECT.ARCHITECT@SHALIMAR.ORG,7310188003

ARCHITECTS NAME AND SIGNATURE

SADHANAND KUMAR
CA/2010/50808
Shalimar Corporate Building
Sector-Alpha-2,
Gautam Buddha Nagar,
Greater Noida-201310
Uttar Pradesh, India

STRUCTURE ENGINEER

Lucknow Development Authority

Building Plan Application Number

LDA/LDD/2/240277

Sanctioned On

14 Jul 2022

Valid Till

17 Jul 2027

Approved By

Vice Chairman (Vice Chairman)

Examined By

Rajesh Sharma (Junior engineer)

Shiv Kumar (Junior engineer)

Nagendra Singh (Assistant Engineer)

Bhupendra Veer Singh (Executive engineer)

Nitin Mittal (Chief Town Planner)

Pawan kumar Gangwar (Secretary)

Note: - 1) This drawing is prepared as per the current prevailing Building Bye Laws.
2) If Map sanctioned is used for purpose anything other than stated in application will lead to rejection of Map.

Total Plot Area : -	124117.05	Total FAR Area : -	0
Total Coverage Area : -	0	Total BUA Area : -	0

ISO_full_bleed_A4D_(1682.00_x_2378.00_MM)

The correctness and accuracy of Proposal information and drawing is a responsibility of PO/Owner. Accuracy of Scrutiny Report is subject to accuracy of end-user provided data, 3rd party software/hardware/services, etc. SoftArch Engineers Ltd. is not liable for any damages which may arise from use, or inability to use the Application. Tools printed in Yellow and Blue color are user inputs, which are not verified and not generated by scrutiny software.