PRODUCED BY AN AUTODESK EDUCATIONAL PRODUCT

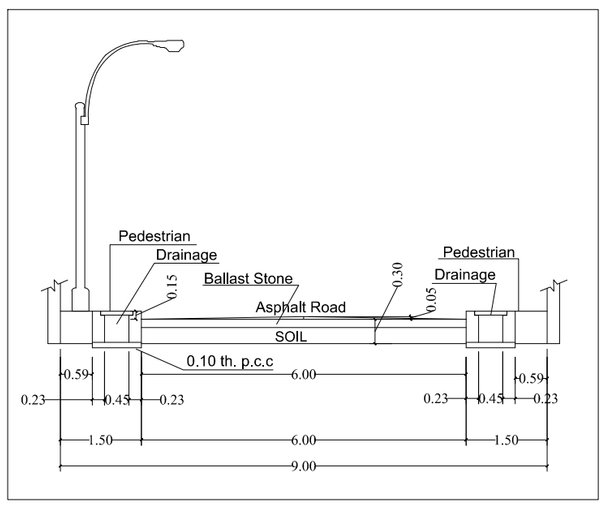

9.00 MT. WD. INTERNAL ROAD SECTION

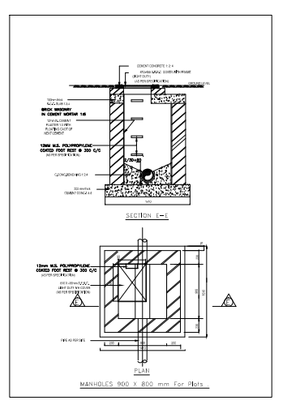

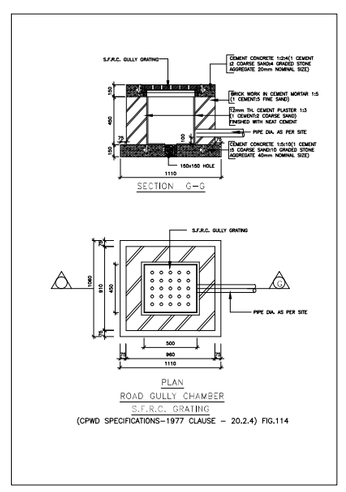

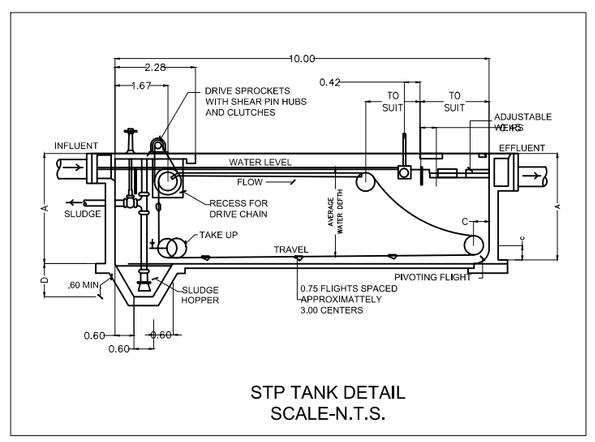

STP TANK DETAIL
SCALE-N.T.S.

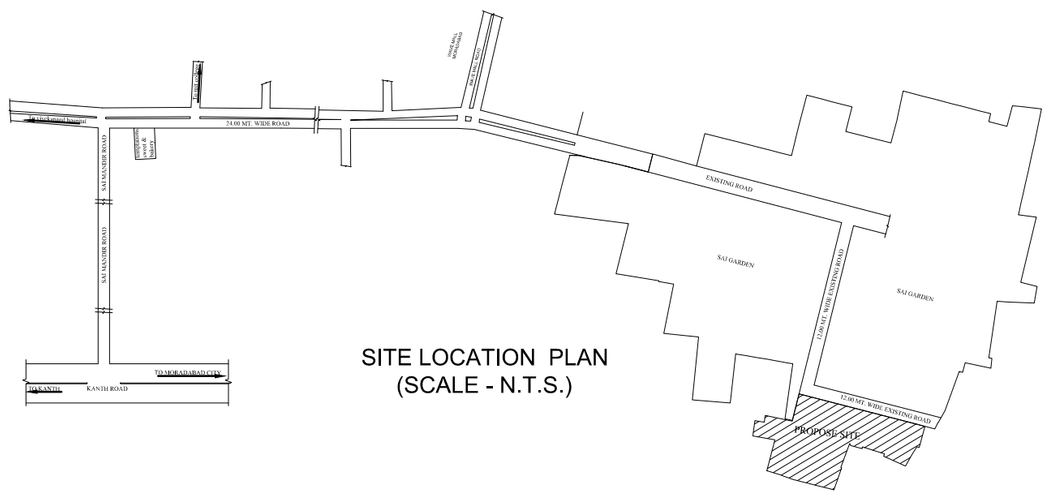

SITE LOCATION PLAN
(SCALE - N.T.S.)

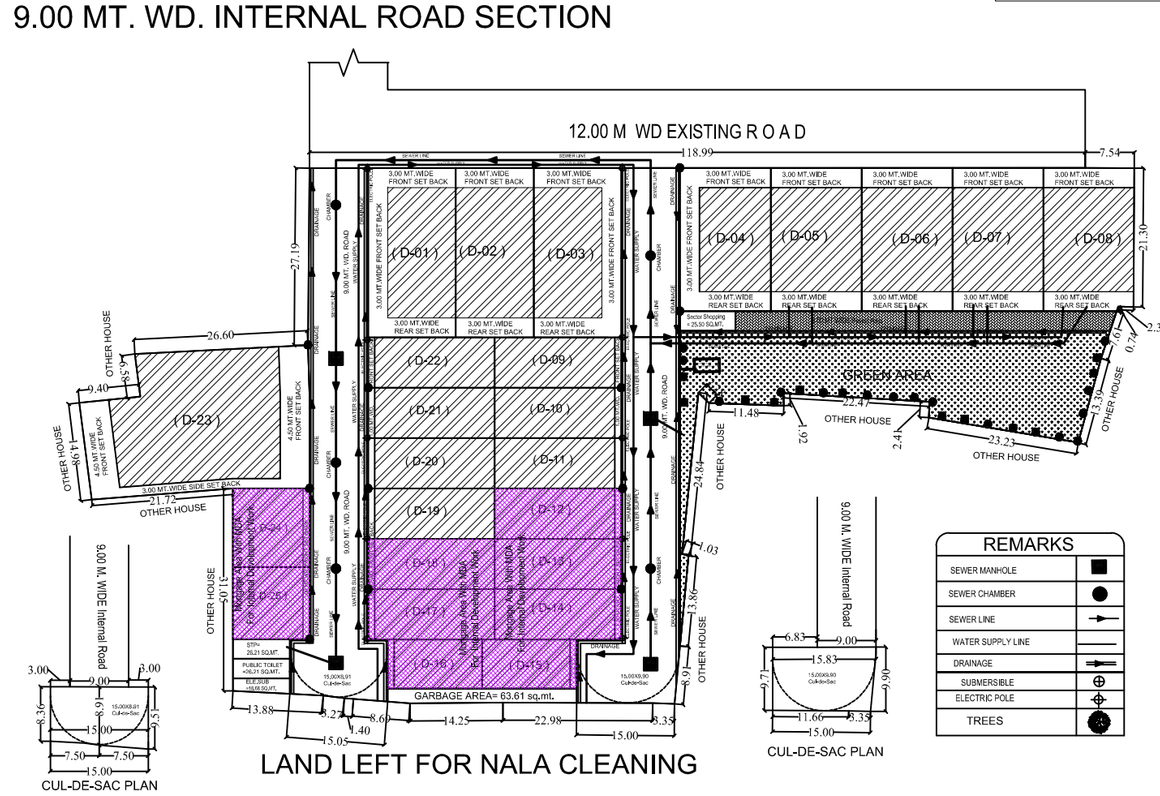

LAND LEFT FOR NALA CLEANING

SERVICE PLAN

REMARKS	
SEWER MANHOLE	■
SEWER CHAMBER	●
SEWER LINE	→
WATER SUPPLY LINE	
DRAINAGE	
SUBMERSIBLE	⊕
ELECTRIC POLE	
TREES	

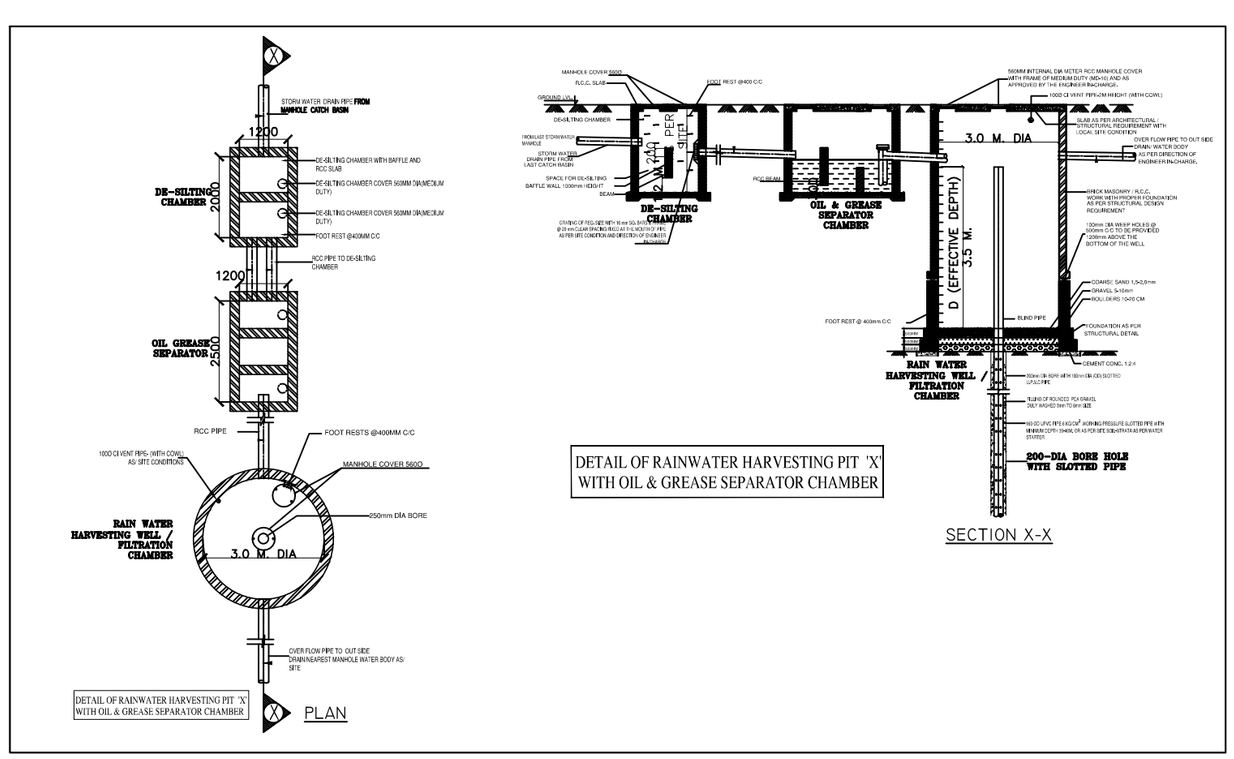

DETAIL OF RAINWATER HARVESTING PIT 'X' WITH OIL & GREASE SEPARATOR CHAMBER

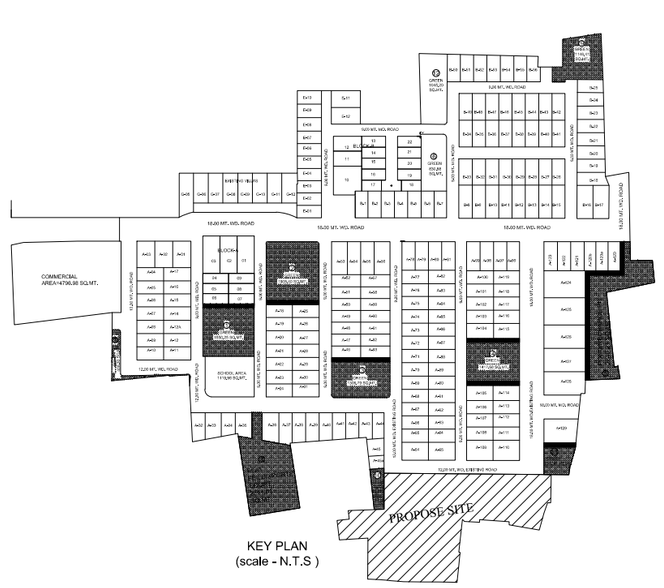

KEY PLAN
(scale - N.T.S)

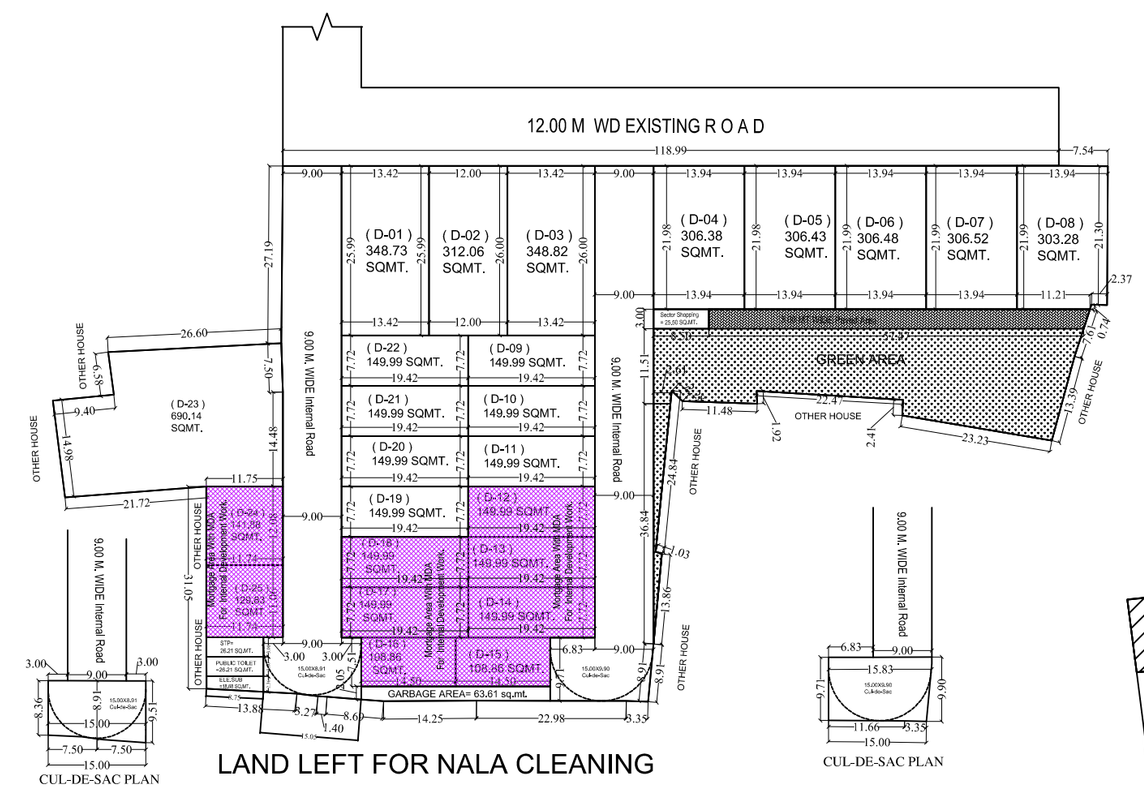

LAND LEFT FOR NALA CLEANING

LAYOUT PLAN

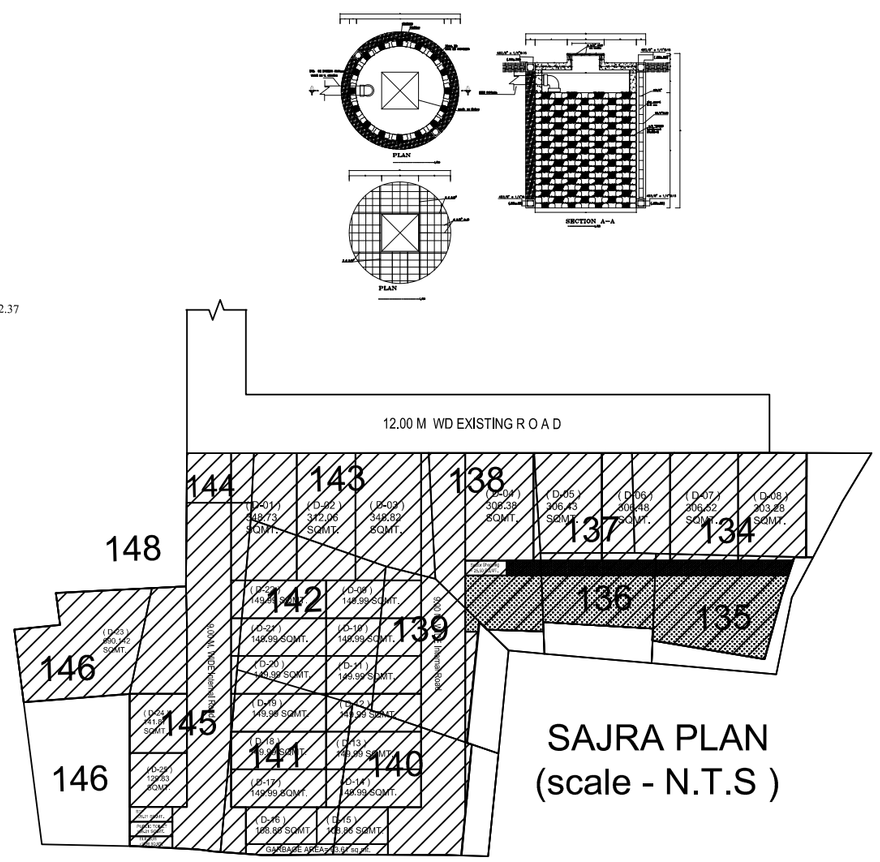

SAJRA PLAN
(scale - N.T.S)

PLOT AREA STATEMENT

PLOT NO.	AREA IN SQMT.
D-01	348.73 SQ.MT.
D-02	312.06 SQ.MT.
D-03	348.82 SQ.MT.
D-04	306.38 SQ.MT.
D-05	306.43 SQ.MT.
D-06	306.48 SQ.MT.
D-07	306.52 SQ.MT.
D-08	303.28 SQ.MT.
D-09	149.99 SQ.MT.
D-10	149.99 SQ.MT.
D-11	149.99 SQ.MT.
D-12	149.99 SQ.MT.
D-13	149.99 SQ.MT.
D-14	149.99 SQ.MT.
D-15	108.86 SQ.MT.
D-16	108.86 SQ.MT.
D-17	149.99 SQ.MT.
D-18	149.99 SQ.MT.
D-19	149.99 SQ.MT.
D-20	149.99 SQ.MT.
D-21	149.99 SQ.MT.
D-22	149.99 SQ.MT.
D-23	690.14 SQ.MT.
D-24	141.88 SQ.MT.
D-25	129.83 SQ.MT.
TOTAL PLOT =25	TOTAL AREA= 5518.15 SQ.MT.

LAND AREA STATEMENT

Khasra No.	Land Area	OWNER'S NAME
134	740.00 SQMT.	*A.C.C. BUILDERS MORADABAD*
135	500.00 SQMT.	*A.C.C. BUILDERS MORADABAD*
136	340.00 SQMT.	*A.C.C. BUILDERS MORADABAD*
137	400.00 SQMT.	*A.C.C. BUILDERS MORADABAD*
138	730.00 SQMT.	*A.C.C. BUILDERS MORADABAD*
139	580.00 SQMT.	*A.C.C. BUILDERS MORADABAD*
140	690.00 SQMT.	*A.C.C. BUILDERS MORADABAD*
141	810.00 SQMT.	*A.C.C. BUILDERS MORADABAD*
142	850.00 SQMT.	*A.C.C. BUILDERS MORADABAD*
143	730.00 SQMT.	*A.C.C. BUILDERS MORADABAD*
144	136.00 SQMT.	*A.C.C. BUILDERS MORADABAD*
145	1290.00 SQMT.	*A.C.C. TOWNSHIP & .LAND DEV.*
146	485.00 SQMT.	*A.C.C. TOWNSHIP & .LAND DEV.*

TOTAL LAND AREA= 8281.00 SQ.MT.

SITUATED AT- KHASRA NO. 134, 135, 136, 137, 138, 139, 140, 141, 142, 143, 144, 145, 146, MUKRABPUR AHATMALI MORADABAD

MORTGAGE PLOT AREA STATEMENT

PLOT NO.	AREA IN SQMT.
D-12	149.99 SQ.MT.
D-13	149.99 SQ.MT.
D-14	149.99 SQ.MT.
D-15	108.86 SQ.MT.
D-16	108.86 SQ.MT.
D-17	149.99 SQ.MT.
D-18	149.99 SQ.MT.
D-24	141.88 SQ.MT.
D-25	129.83 SQ.MT.
TOTAL PLOT=9	TOTAL AREA= 1239.38 SQ.MT.

FILE NO. MBDA/ [illegible] 4-25/0659

AREA STATEMENT

	AREA IN SQ.MT.	PERCENTAGE
LAND AREA STATEMENT		
TOTAL LAND AREA	8281.00	
AS PER SITE LAND AREA	8280.12	100 (%)
TOTAL ROAD AREA	1590.13	19.20 (%)
GREEN AREA+Paved Area	1011.63	
Paved Area	173.90	
TOTAL GREEN AREA	837.73	
TOTAL PLOTS AREA	5518.15	66.64 (%)
Sector Shopping	[illegible]	0.31
GARBAGE AREA	[illegible]	
ELECTRIC SUBSTATION	[illegible]	
STP	20.21	
PUBLIC TOILET	20.21	
TOTAL SERVICE AREA	134.71	1.63
LENGTH	1.63TH (RMT.)	
TOTAL PLOTS ACHIEVED	25	

GREEN AREA CALCULATION

AS PER SITE AREA = 8280.12 SQ.MT.

8280.12 SQ.MT. - 3000 SQ.MT.= 5280.12 SQ.MT.

$\frac{5280.12 \times 15.00}{100}$ = 792.018 SQ.MT.

REQUIRED GREEN AS PER NEW BYE LAWS = 792.018 SQ.MT.

PROPOSED GREEN = 837.73 SQ.MT. (15.86 %)

$\frac{837.73 \times 100}{5280.12}$ =15.86%

PROPOSED RESIDENTIAL LAYOUT FOR

M/S.-A.C.C.TOWNSHIP

AND LAND DEVELOPMENT MORADABAD
&
M/S. - A.C.C. BUILDERS MORADABAD

THROUGH ITS PARTNER

SHRI- MANOJ KUMAR AHUJA
R/O- RAJAN ENCLAVE MORADABAD
AND
SHRI- MADANLAL CHHABRA
S/O SHRI THAKURDAS
R/O- KHUSHAL NAGAR MORADABAD

PROJECT NAME- SAI GARDEN ENCLAVE

SITUATED AT- KHASRA NO. 134, 135, 136, 137,138, 139, 140, 141, 142, 143, 144, 145, 146, MUKRABPUR AHATMALI MORADABAD

DIRECTION

SCALE

AS SHOWN IN DRAWING

OWNERS' SIGN.

ARCHITECTS' SIGN.

Archna Raj Planners & Consultants
Ar. VINAYAK GUPTA
CA/2014/85783
Opp. Civil Lines Police Station Moradabad

ARCHITECT:

VINAYAK GUPTA
B.ARCH,M.ARCH(LONDON)

Archna Raj Planners & Consultants
Add. Pandit Shanker Dutt Sharma Marg, Opp.
Civil Lines Police Station, Moradabad (U.P.)
M: +91 9359438900

Signature Not Verified
Digitally signed by VINAYAK GUPTA
Date: 2025.11.07 12:42:11 IST
Reason: SelfAttested
Location: Architect
Signature Not Verified
Digitally signed by MANOJ KUMAR AHUJA
Date: 2025.11.07 15:25:15 IST
Reason: SelfAttested
Location: Developer
Signature Not Verified
Digitally signed by Chairman
Date: 2025.11.07 15:25:15 IST
Reason: SelfAttested
Location: Developer

PRODUCED BY AN AUTODESK EDUCATIONAL PRODUCT

PRODUCED BY AN AUTODESK EDUCATIONAL PRODUCT

PRODUCED BY AN AUTODESK EDUCATIONAL PRODUCT