Project Title :PROPOSED GROUP HOUSING AT PLOT GROUP HOUSING NO -2 HAVING KHASRA NO. 233 PART 234 PART,235 PART 236 PART 237 & PART 238 GARDEN BAY AT VILLA GHAILA & ALINAGAR THROUGH AUTO SIGN MR. SHEO JANAM CHAUDHARY

File No	LDA/BP/22-23/2854	Sheet	1
Submission Date	2023-04-08	Scale	1:100

SITE PLAN
(Scale - 1:200)

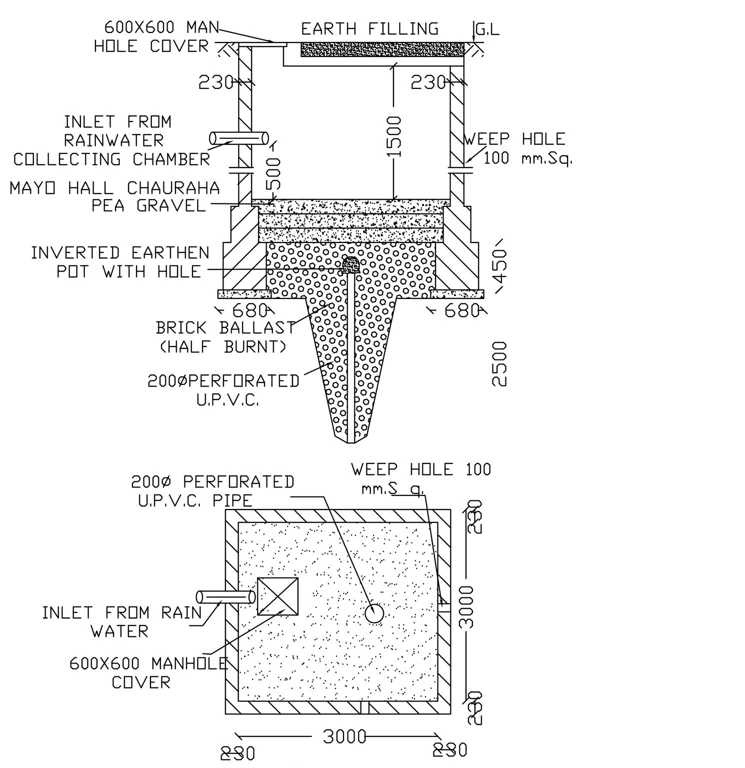

PLAN

WATER RECHARGING PIT

(NOT TO SCALE)

(6.0 MT. DEEP)

A	AREA STATEMENT	VERSION NO.: 1.0.84 VERSION DATE: 30/03/2023
	PROJECT DETAIL :	
	Authority: Lucknow Development Authority	Plot Use: Residential
	AuthorityClass: Category A	Plot SubUse: Group Housing
	AuthorityGrade: Development Authority (DA)	Development Plan: GHAILA ALINAGAR IIM ROAD Shalimar
	CaseTrack: Regular	Land Use Zone: Residential use Zone
	Project Type: Building Permission	Land SubUse Zone: Residential Zone
	Nature of Development: NEW	Layout Type: NA
	Development Area: Undeveloped Area	
	SubDevelopment Area: Village Area	
	Special Project: NA	
	Site Address: District:Lucknow,Tehsil:Lucknow,Village:Ghaila	
	AREA DETAILS :	Sq.Mts.
1.	Area of Plot As per record	-
	Document Area	10336.12
	As per site condition	10711.59
	Area of Plot Considered	10336.12
2.	Deduction for	
	(a)Proposed roads	0.00
	(b)Any reservations	0.00
	Total(a + b)	0.00
3.	Net Area of plot (1 - 2) AREA OF PLOT	10336.12
	Green and open space	1117.16
	Plot Area For Coverage	10336.12
	Plot Area For FAR	10336.12
	Perm. FAR Area (2.50)	25840.30
	Perm. Paid FAR Area (1.25)	12920.15
5.	Total Perm. FAR area with Paid FAR (3.75)	38760.45
	Total Perm. FAR area (3.75)	38760.45
	Total Paid Proposed FAR Area	4517.17
6.	Total Built up area permissible at:	
	Permissible Coverage area (40.00 %)	4134.45
	Proposed Coverage Area (19.05 %)	1969.11
	Total Prop. Coverage Area (19.05 %)	1969.11
	Balance coverage area (20.95 %)	2165.34

Proposed Area at:

-		Proposed Built up	Existing Built up	Proposed F.S.I	Existing F.S.I
	Basement Floor	7902.70	0.00	0.00	0.00
	Stilt Floor	975.44	0.00	508.16	0.00
	Ground Podium Floor	2234.72	0.00	1739.91	0.00
	First Floor	1859.68	0.00	1578.99	0.00
	Second Floor	1859.68	0.00	1578.99	0.00
	Third Floor	1859.68	0.00	1578.99	0.00
	Fourth Floor	1859.68	0.00	1578.99	0.00
	Fifth Floor	1859.68	0.00	1578.99	0.00
	Sixth Floor	1859.68	0.00	1578.99	0.00
	Seventh Floor	1859.68	0.00	1578.99	0.00
	Eighth Floor	1859.68	0.00	1578.99	0.00
	Ninth Floor	1859.68	0.00	1578.99	0.00
	Tenth Floor	1859.68	0.00	1578.99	0.00
	Eleventh Floor	1859.68	0.00	1578.99	0.00
	Twelfth Floor	1859.68	0.00	1578.99	0.00
	Thirteenth Floor	1859.68	0.00	1578.99	0.00
	Fourteenth Floor	1859.68	0.00	1578.99	0.00
	Fifteenth Floor	1859.68	0.00	1578.99	0.00
	Sixteenth Floor	1859.68	0.00	1578.99	0.00
	Seventeenth Floor	1665.24	0.00	1407.52	0.00
	Eighteenth Floor	1658.86	0.00	1401.16	0.00
	Terrace Floor	145.67	0.00	0.00	0.00
	Total Area:	44337.51	0.00	30320.59	0.00

	AccessoryUse Area considered towards computation of FAR:	36.84
	Total FAR Area:	30357.47
	AccessoryUse Area Added in BuiltUp Area:	86.84
	Total BuiltUp Area:	44424.41
	Proposed F.S.I. consumed:	2.94
C.	Tenement Statement	
4.	Tenement Proposed At:	
	G.F.	8.00
	All Floors	213.00
5.	Total Tenements (3 + 4)	221
E.	Parking Statement	
1.	Parking Space Required as per Regulations:	4108.50
2.	Proposed Parking Space:	16338.28

Color Notes

COLOR INDEX	
PLOT BOUNDARY	black
ABUTTING ROAD	green
PROPOSED CONSTRUCTION	red
COMMON PLOT	yellow
ROAD ALIGNMENT (ROAD WIDENING AREA)	yellow
FUTURE T.P.SCHEME DEDUCTION AREA	blue
EXISTING (To be retained)	blue
EXISTING (To be demolished)	yellow

Parking Check (Table 7b)

Vehicle Type	Reqd.			Prop.	
	No.	Reduced Reqd Parking (Incase of Plot having RWArea surrendered FOC)	Area	No.	Area
Equivalent Car Space	-	-	-	394	5417.50
Total Car	273	-	3753.75	394	5417.50
Visitor's Car Parking	-	-	354.75	28	385.00
Other Parking	-	-	-	-	10535.78
Total			4108.50		16338.28

Buildingwise Floor FAR Details

Floor Name	Building Name		Total		
	A (HOUSING)				
	Proposed Built Up Area (Sq.mt.)	Proposed FAR Area (Sq.mt.)	Total Proposed Built Up Area (Sq.mt.)	Total FAR Area (Sq.mt.)	Total Paid FAR Area (Sq.mt.)
Basement Floor	7902.70	0.00	7902.70	0.00	0.00
Stilt Floor	975.44	508.16	975.44	508.16	0.00
Ground Podium Floor	2234.72	1739.91	2234.72	1739.91	0.00
First Floor	1859.68	1578.99	1859.68	1578.99	0.00
Second Floor	1859.68	1578.99	1859.68	1578.99	0.00
Third Floor	1859.68	1578.99	1859.68	1578.99	0.00
Fourth Floor	1859.68	1578.99	1859.68	1578.99	0.00
Fifth Floor	1859.68	1578.99	1859.68	1578.99	0.00
Sixth Floor	1859.68	1578.99	1859.68	1578.99	0.00
Seventh Floor	1859.68	1578.99	1859.68	1578.99	0.00
Eighth Floor	1859.68	1578.99	1859.68	1578.99	0.00
Ninth Floor	1859.68	1578.99	1859.68	1578.99	0.00
Tenth Floor	1859.68	1578.99	1859.68	1578.99	0.00
Eleventh Floor	1859.68	1578.99	1859.68	1578.99	0.00
Twelfth Floor	1859.68	1578.99	1859.68	1578.99	0.00
Thirteenth Floor	1859.68	1578.99	1859.68	1578.99	0.00
Fourteenth Floor	1859.68	1578.99	1859.68	1578.99	0.00
Fifteenth Floor	1859.68	1578.99	1859.68	1578.99	92.62
Sixteenth Floor	1859.68	1578.99	1859.68	1578.99	1578.99
Seventeenth Floor	1665.24	1407.52	1665.24	1407.52	1407.52
Eighteenth Floor	1658.86	1401.16	1658.86	1401.16	1401.16
Terrace Floor	145.67	0.00	145.67	0.00	0.00
Total:	44337.51	30320.59	44337.51	30320.59	4480.29

Required Parking(Table 7a)

Building Name	Type	SubUse	Area (Sq.mt.)	Units		Car			Visitors Car		
				Parking space reqd for every	Prop.	Reqd./Unit	Reqd.	Prop.	Reqd./Unit	Reqd.	Prop.
A (HOUSING)	Community Facility	Day care centres	> 0	100	1072.06	2.00	15	-	-	-	-
	Residential	Group Housing	0 - 50	1	-	-	-	-	-	-	-
			50 - 100	1	70.00	1.00	70	-	-	-	-
			100 - 150	1	150.00	1.25	188	-	-	-	-
			> 150	1	-	1.50	-	-	-	-	-
			> 0	1	-	-	-	-	1.00	-	-
	Total :		-	-	-	-	273	394	-	0	28

Green and open space Area

Name	Prop. Area
GREEN 01	1117.16

Tree Details (Table 3h)

Plot	Name	Nos Of Trees	
		Reqd	Prop
PLOT	Tree	52	153

Building USE/SUBUSE Details

Building Name	Building Use	Building SubUse	Building Use Group	Building Type	Building Structure	No Of Residential Units	No Of Non-Residential Units	Floor Name	Floor Use	Floor SubUse	FAR Name	FAR Use	FAR SubUse
A (HOUSING)	Residential	Group Housing		-	Highrise	220	1	BASEMENT FLOOR PLAN	Residential + Parking	Group Housing	-	-	-
								STILT FLOOR PLAN	Community Facility + Parking	Day care centres	Community Facility	Community Facility	Day care centres
								GROUND PODIUM FLOOR PLAN	Community Facility + SW.POOL	Day care centres	Residential FAR	Residential	Group Housing
											Community Facility	Community Facility	Day care centres
								TYPICAL - 1, 2, 3, 4, 5, 6, 7, 8, 9, 10, 11, 12, 13, 14, 15& 16 FLOOR PLAN	Residential	Group Housing	Residential FAR	Residential	Group Housing
								SEVENTEENTH FLOOR PLAN	Residential	Group Housing	Residential FAR	Residential	Group Housing
								EIGHTEENTH FLOOR PLAN	Residential	Group Housing	Residential FAR	Residential	Group Housing
								TERRACE FLOOR PLAN	Residential	Group Housing	-	-	-

FAR & Unit Details

Building	No. of Same Bldg	Gross Built Up Area (Sq.mt.)	Deductions From Gross BUA(Area in Sq.mt.) OTS	Void	Total Built Up Area (Sq.mt.)	Mumty	Lift	Lift Machine	Lift Lobby	Balcony	Accessory Use	Ramp	Covered Area	Parking	Proposed FAR Area (Sq.mt.) Resi.	Amenities	Total FAR Area (Sq.mt.)	No. of Unit
A (HOUSING)	1	45592.58	585.61	681.89	44337.51	1070.20	668.47	32.57	691.62	3079.77	189.02	747.47	354.98	7535.96	29248.53	1072.06	30320.59	221
Grand Total :	1	45592.58	585.61	681.89	44337.51	1070.20	668.47	32.57	691.62	3079.77	189.02	747.47	354.98	7535.96	29248.53	1072.06	30320.59	221

(Columns Mumty through Parking: Deductions (Area in Sq.mt.))

RAGHAVA ARCHITECTS
Architecture-Structure- Interiors -Valuers-Vastu
HEAD OFFICE:-
PLOT NO :- CS-9, SECOND FLOOR , COMMERCIAL MARKET
GYAN KHAND -II, INDIRAPURAM, GHAZIABAD (UP) INDIA
(NEAR ST. THOMAS SCHOOL)
E mail :- raghavaarchitects@gmail.com, Mob :- 9810379715

OWNER'S NAME AND SIGNATURE

SHALIMAR KSMB PROJECTS Throu. Autho. Sign Mr. Sheo Janam Chaudhary,architect@shalimar.org,8800284006

ARCH/ENG'S NAME AND SIGNATURE ENGINEER

Rajneesh Kumar

CA/2017/86949

Digitally signed by Rajneesh Kumar
Date: 29 May 2023 11:27:00
Designation :Architect

Lucknow Development Authority

Digitally signed by INDRA MANI TRIPATHI
Date: 02 Jun 2023 10:28:11
Organization :Lucknow Development Authority
Designation :Vice Chairman

Building Plan Application Number
LDA/BP/22-23/2854

Sanctioned On
02 May 2023

Valid Till
28 May 2028

Approved By
Vice Chairman (Vice Chairman)

Examined By
Satish Kumar Yadav (Junior engineer)
Lakshman Singh (Junior engineer)
Rajesh Sharma (Assistant Engineer)
Kaushvendra Kumar Gautam (Executive engineer/Town Planner)
Gyanendra Verma (Chief Town Planner)
Pawan kumar Gangwar (Secretory)

Note: - 1) This drawing is prepared as per the current prevailing Building Bye Laws.
2) If Map sanctioned is used for purpose anything other than stated in application will lead to rejection of Map.

Total Plot Area: - 10336.12	Total FAR Area: - 30357.47
Total Coverage Area: - 1969.11	Total BUA Area: - 44424.41

ISO_A0_(841.00_x_1189.00_MM)

The correctness and accuracy of Proposal Information and drawing is a responsibilty of POR/owner. Accuracy of Scrutiny Report is subject to accuracy of end-user provided data, 3rd party software/hardware/services, etc. SoftTech Engineers Ltd. is not liable for any damages which may arise from use, or inability to use the Application. Texts printed in 'Italics' and 'Blue' color are user inputs, which are not verified and not generated by scrutiny software.

Project Title :PROPOSED GROUP HOUSING AT PLOT GROUP HOUSING NO -2 HAVING KHASRA NO. 233 PART 234 PART,235 PART 236 PART 237 & PART 238 GARDEN BAY AT VILLA GHAILA & ALINAGAR THROUGH AUTO SIGN MR. SHEO JANAM CHAUDHARY

File No	LDA/BP/22-23/2854	Sheet	2
Submission Date	2023-04-08	Scale	1:100

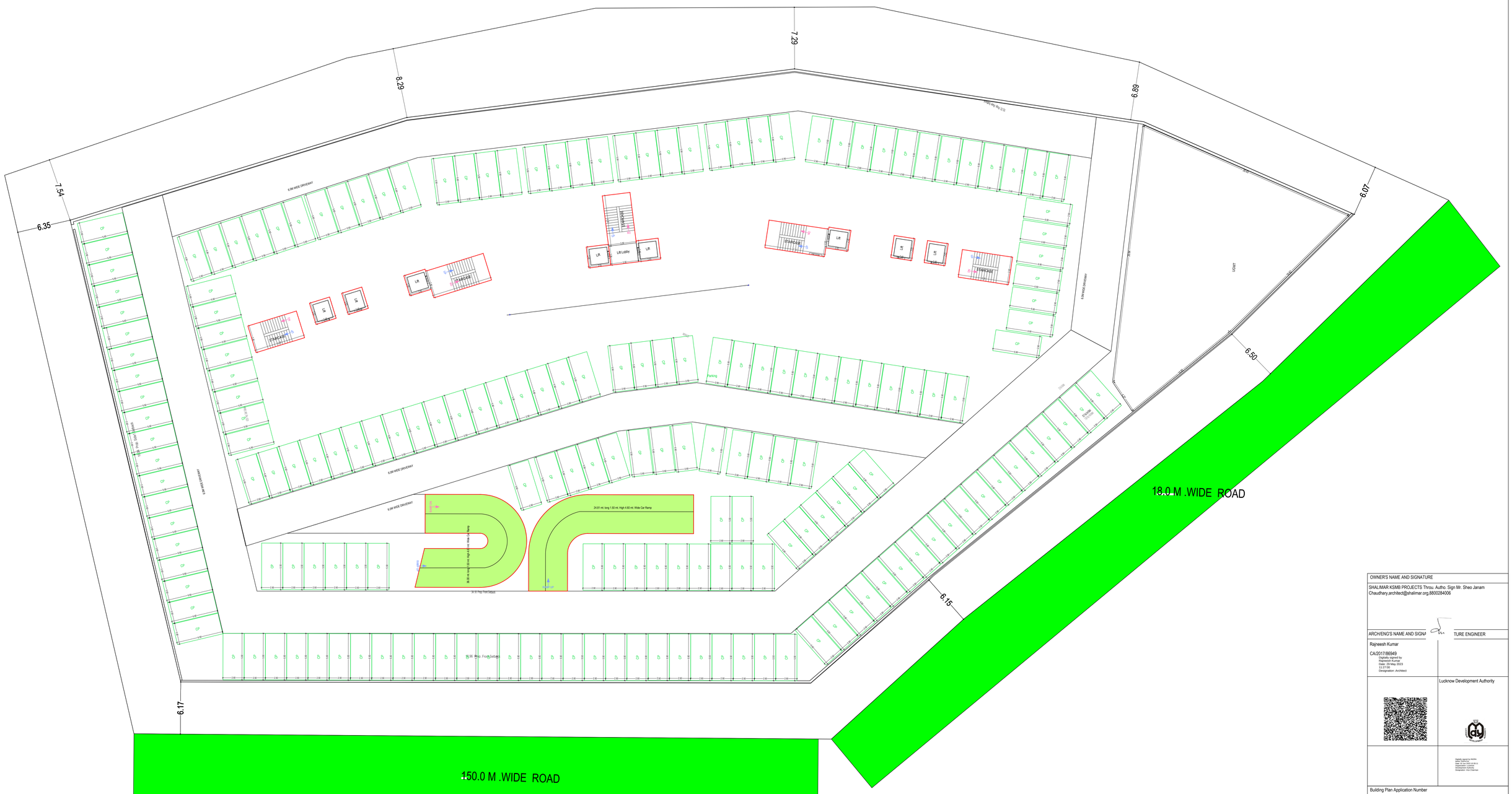

BASEMENT FLOOR PLAN
(SCALE 1:100)

OWNER'S NAME AND SIGNATURE

SHALIMAR KSMB PROJECTS Throu. Autho. Sign Mr. Sheo Janam Chaudhary,architect@shalimar.org,8800284006

ARCH/ENG'S NAME AND SIGNATURE ENGINEER

Rajneesh Kumar

CA/2017/86949

Digitally signed by Rajneesh Kumar
Date: 02 May 2023 11:27:00
Designation : Architect

Lucknow Development Authority

Digitally signed by NIDHI
Date: 02 May 2023 10:36:11
Organisation: Lucknow Development Authority
Designation : Vice Chairman

Building Plan Application Number

LDA/BP/22-23/2854

Sanctioned On

02 May 2023

Valid Till

28 May 2028

Approved By

Vice Chairman (Vice Chairman)

Examined By

Satish Kumar Yadav (Junior engineer)

Lakshman Singh (Junior engineer)

Rajesh Sharma (Assistant Engineer)

Kaushvendra Kumar Gautam (Executive engineer/Town Planner)

Gyanendra Verma (Chief Town Planner)

Pawan kumar Gangwar (Secretory)

Note: - 1) This drawing is prepared as per the current prevailing Building Bye Laws.
2) If Map sanctioned is used for purpose anything other than stated in application will lead to rejection of Map.

Total Plot Area: -	10336.12	Total FAR Area: -	30357.47
Total Coverage Area: -	1969.11	Total BUA Area: -	44424.41

ISO_A0_(841.00_x_1189.00_MM)

The correctness and accuracy of Proposal Information and drawing is a responsibility of POR/owner. Accuracy of Scrutiny Report is subject to accuracy of end-user provided data, 3rd party software/hardware/services, etc. SoftTech Engineers Ltd. is not liable for any damages which may arise from use, or inability to use the Application. Texts printed in 'Italics' and 'Blue' color are user inputs, which are not verified and not generated by scrutiny software.

Project Title :PROPOSED GROUP HOUSING AT PLOT GROUP HOUSING NO -2 HAVING KHASRA NO. 233 PART 234 PART,235 PART 236 PART 237 & PART 238 GARDEN BAY AT VILLA GHAILA & ALINAGAR THROUGH AUTO SIGN MR. SHEO JANAM CHAUDHARY

File No	LDA/BP/22-23/2854	Sheet	3
Submission Date	2023-04-08	Scale	1:100

STILT FLOOR PLAN
(Proposed)
(SCALE 1:100)

OWNER'S NAME AND SIGNATURE
SHALIMAR KSMB PROJECTS Throu. Autho. Sign Mr. Sheo Janam Chaudhary,architect@shalimar.org,8800284006
ARCHENG'S NAME AND SIGNATURE ENGINEER
Rajneesh Kumar CA/2017/86949 Digitally signed by Rajneesh Kumar Date: 02 May 2023 12:27:08 Designation : Architect
Lucknow Development Authority
Digitally signed by NIDHI Date: 02 May 2023 12:30:11 Organization: Lucknow Development Authority Designation : Vice Chairman

Building Plan Application Number
LDA/BP/22-23/2854

Sanctioned On
02 May 2023

Valid Till
28 May 2028

Approved By
Vice Chairman (Vice Chairman)

Examined By
Satish Kumar Yadav (Junior engineer)
Lakshman Singh (Junior engineer)
Rajesh Sharma (Assistant Engineer)
Kaushvendra Kumar Gautam (Executive engineer/Town Planner)
Gyanendra Verma (Chief Town Planner)
Pawan kumar Gangwar (Secretory)

Note: - 1) This drawing is prepared as per the current prevailing Building Bye Laws.
2) If Map sanctioned is used for purpose anything other than stated in application will lead to rejection of Map.

Total Plot Area: -	10336.12	Total FAR Area: -	30357.47
Total Coverage Area: -	1969.11	Total BUA Area: -	44424.41

ISO_A0_(841.00_x_1189.00_MM)

The correctness and accuracy of Proposal Information and drawing is a responsibility of PO/Rowner. Accuracy of Scrutiny Report is subject to accuracy of end-user provided data, 3rd party software/hardware/services, etc. SoftTech Engineers Ltd. is not liable for any damages which may arise from use, or inability to use the Application. Texts printed in 'Italics' and 'Blue' color are user inputs, which are not verified and not generated by scrutiny software.

Project Title :PROPOSED GROUP HOUSING AT PLOT GROUP HOUSING NO -2 HAVING KHASRA NO. 233 PART 234 PART,235 PART 236 PART 237 & PART 238 GARDEN BAY AT VILLA GHAILA & ALINAGAR THROUGH AUTO SIGN MR. SHEO JANAM CHAUDHARY

File No	LDA/BP/22-23/2854	Sheet	4
Submission Date	2023-04-08	Scale	1:100

GROUND PODIUM FLOOR PLAN
(Proposed)
(SCALE 1:100)

OWNER'S NAME AND SIGNATURE

SHALIMAR KSMB PROJECTS Throu. Autho. Sign Mr. Sheo Janam Chaudhary,architect@shalimar.org,8800284006

ARCH/ENG'S NAME AND SIGNATURE ENGINEER

Rajneesh Kumar

CA/2017/86949
Digitally signed by Rajneesh Kumar
Date: 29 May 2023 13:27:00
Designation :Architect

Lucknow Development Authority

Digitally signed by NIDHI
Date: 2023.05.30 15:31:11 +05'30'
Development Authority
Designation : Vice Chairman

Building Plan Application Number

LDA/BP/22-23/2854

Sanctioned On

02 May 2023

Valid Till

28 May 2028

Approved By

Vice Chairman (Vice Chairman)

Examined By

Satish Kumar Yadav (Junior engineer)

Lakshman Singh (Junior engineer)

Rajesh Sharma (Assistant Engineer)

Kaushvendra Kumar Gautam (Executive engineer/Town Planner)

Gyanendra Verma (Chief Town Planner)

Pawan kumar Gangwar (Secretory)

Note: - 1) This drawing is prepared as per the current prevailing Building Bye Laws.
2) If Map sanctioned is used for purpose anything other than stated in application will lead to rejection of Map.

Total Plot Area: -	10336.12	Total FAR Area: -	30357.47
Total Coverage Area: -	1969.11	Total BUA Area: -	44424.41

ISO_A0_(841.00_x_1189.00_MM)

The correctness and accuracy of Proposal Information and drawing is a responsibility of PO/Owner. Accuracy of Scrutiny Report is subject to accuracy of end-user provided data, 3rd party software/hardware/services, etc. SoftTech Engineers Ltd. is not liable for any damages which may arise from use, or inability to use the Application. Texts printed in 'Italics' and 'Blue' color are user inputs, which are not verified and not generated by scrutiny software.

Project Title :PROPOSED GROUP HOUSING AT PLOT GROUP HOUSING NO -2 HAVING KHASRA NO. 233 PART 234 PART,235 PART 236 PART 237 & PART 238 GARDEN BAY AT VILLA GHAILA & ALINAGAR THROUGH AUTO SIGN MR. SHEO JANAM CHAUDHARY

File No	LDA/BP/22-23/2854	Sheet	5
Submission Date	2023-04-08	Scale	1:100

TYPICAL - 1, 2, 3, 4, 5, 6, 7, 8, 9, 10, 11, 12, 13, 14, 15& 16 FLOOR PLAN
(Proposed)
(SCALE 1:100)

SEVENTEENTH FLOOR PLAN
(Proposed)
(SCALE 1:100)

Total Plot Area: - 10336.12	Total FAR Area: - 30357.47
Total Coverage Area: - 1969.11	Total BUA Area: - 44424.41

OWNER'S NAME AND SIGNATURE

SHALIMAR KSMB PROJECTS Throu. Autho. Sign Mr. Sheo Janam Chaudhary.architect@shalimar.org.8800284006

ARCHITECT'S NAME AND SIGNATURE

Rajneesh Kumar

CA/2017/86949
Digitally signed by Rajneesh Kumar
Date: 29 May 2023 11:27:00
Designation :Architect

Lucknow Development Authority

Digitally signed by AKASH
Date: 2023.05.30 12:08:11 GMT+0530
Lucknow Development Authority
Designation : Vice Chairman

Building Plan Application Number
LDA/BP/22-23/2854

Sanctioned On
02 May 2023

Valid Till
28 May 2028

Approved By
Vice Chairman (Vice Chairman)

Examined By
Satish Kumar Yadav (Junior engineer)
Lakshman Singh (Junior engineer)
Rajesh Sharma (Assistant Engineer)
Kaushvendra Kumar Gautam (Executive engineer/Town Planner)
Gyanendra Verma (Chief Town Planner)
Pawan kumar Gangwar (Secretory)

Note: - 1) This drawing is prepared as per the current prevailing Building Bye Laws.
2) If Map sanctioned is used for purpose anything other than stated in application will lead to rejection of Map.

ISO_A0_(841.00_x_1189.00_MM)

The correctness and accuracy of Proposal Information and drawing is a responsibity of POR/owner. Accuracy of Scrutiny Report is subject to accuracy of end-user provided data, 3rd party software/hardware/services, etc. SoftTech Engineers Ltd. is not liable for any damages which may arise from use, or inability to use the Application. Texts printed in 'Italics' and 'Blue' color are user inputs, which are not verified and not generated by scrutiny software.

Project Title :PROPOSED GROUP HOUSING AT PLOT GROUP HOUSING NO -2 HAVING KHASRA NO. 233 PART 234 PART,235 PART 236 PART 237 & PART 238 GARDEN BAY AT VILLA GHAILA & ALINAGAR THROUGH AUTO SIGN MR. SHEO JANAM CHAUDHARY

File No	LDA/BP/22-23/2854	Sheet	6
Submission Date	2023-04-08	Scale	1:100

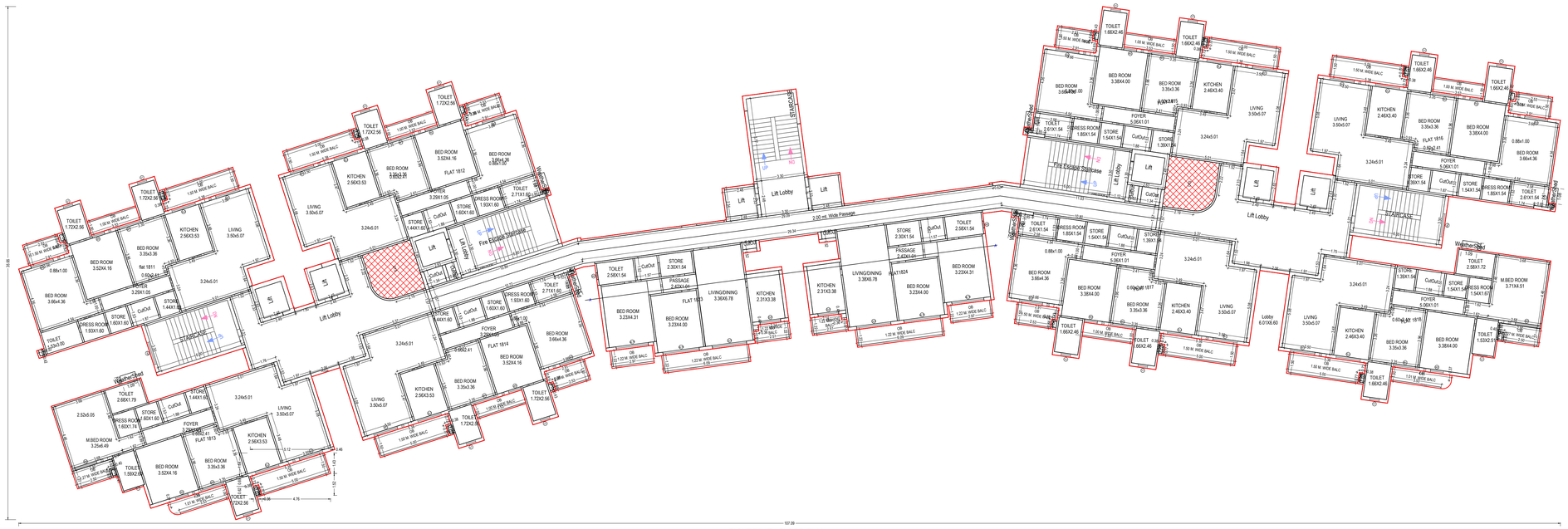

EIGHTEENTH FLOOR PLAN
(Proposed)
(SCALE 1:100)

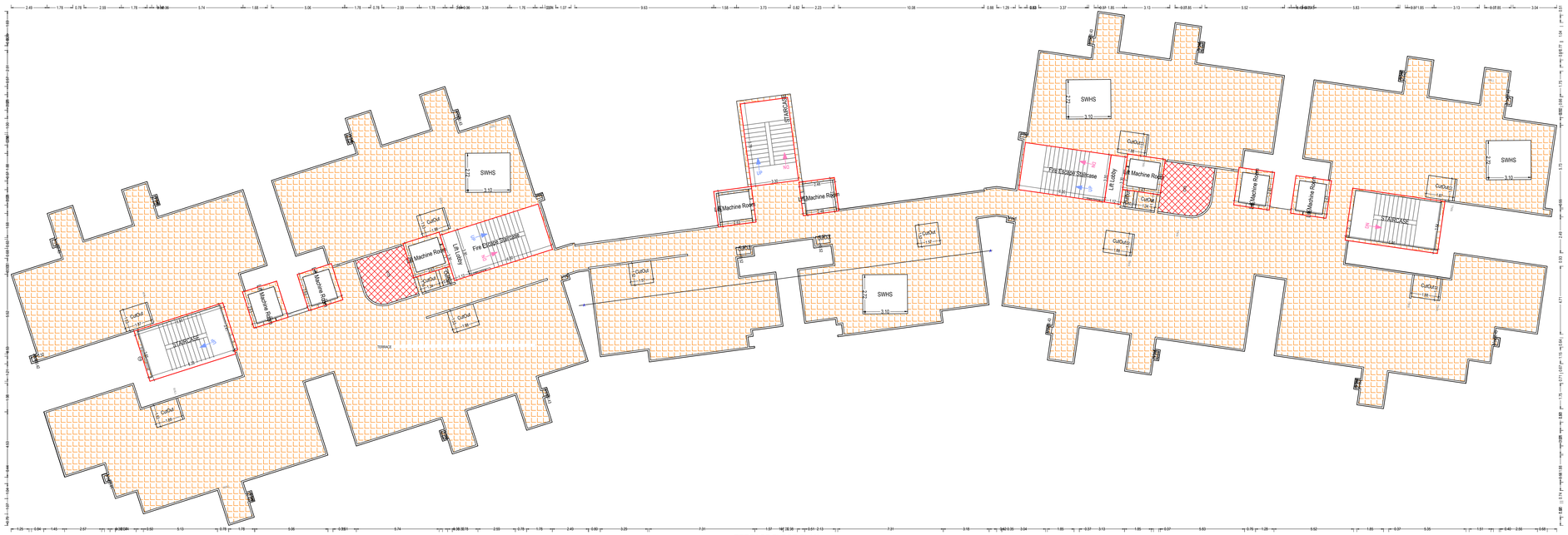

TERRACE FLOOR PLAN
(SCALE 1:100)

OWNER'S NAME AND SIGNATURE	
SHALIMAR KSMB PROJECTS Throu. Autho. Sign Mr. Sheo Janam Chaudhary,architect@shalimar.org,8800284006	
ARCHITECT'S NAME AND SIGNATURE ENGINEER	
Rajneesh Kumar CA/2017/86949 Digitally signed by Rajneesh Kumar Date: 29 May 2023 11:27:00 Designation :Architect	Lucknow Development Authority Digitally signed by AKASH Date: 2023.05.31 Date: 02 Jun 2023 23:38:11 Designation : Junior Engineer Organisation :Authority Designation : Vice Chairman
Building Plan Application Number	
LDA/BP/22-23/2854	
Sanctioned On	
02 May 2023	
Valid Till	
28 May 2028	
Approved By	
Vice Chairman (Vice Chairman)	
Examined By	
Satish Kumar Yadav (Junior engineer) Lakshman Singh (Junior engineer) Rajesh Sharma (Assistant Engineer) Kaushvendra Kumar Gautam (Executive engineer/Town Planner) Gyanendra Verma (Chief Town Planner) Pawan kumar Gangwar (Secretory)	

Note: - 1) This drawing is prepared as per the current prevailing Building Bye Laws.
2) If Map sanctioned is used for purpose anything other than stated in application will lead to rejection of Map.

Total Plot Area: -	10336.12	Total FAR Area: -	30357.47
Total Coverage Area: -	1969.11	Total BUA Area: -	44424.41

ISO_A0_(841.00_x_1189.00_MM)

The correctness and accuracy of Proposal Information and drawing is a responsibility of POR/owner. Accuracy of Scrutiny Report is subject to accuracy of end-user provided data, 3rd party software/hardware/services, etc. SoftTech Engineers Ltd. is not liable for any damages which may arise from use, or inability to use the Application. Texts printed in 'Italics' and 'Blue' color are user inputs, which are not verified and not generated by scrutiny software.

Project Title :PROPOSED GROUP HOUSING AT PLOT GROUP HOUSING NO -2 HAVING KHASRA NO. 233 PART 234 PART,235 PART 236 PART 237 & PART 238 GARDEN BAY AT VILLA GHAILA & ALINAGAR THROUGH AUTO SIGN MR. SHEO JANAM CHAUDHARY

File No	LDA/BP/22-23/2854	Sheet	7
Submission Date	2023-04-08	Scale	1:100

UnitBUA Table for Building :A (HOUSING)

Floor	Name	UnitBUA Type	Net UnitBUA Area	Gross UnitBUA Area	Deductions From Gross UnitBUA(Area in Sq.mt.) Void	Deductions From Gross UnitBUA(Area in Sq.mt.) Chowk	UnitBUA Area	Deductions (Area in Sq.mt.) Door	Window	External Wall	Balcony	Carpet Area	No. of Unit
STILT FLOOR PLAN	SHOPS	Public Utility Area	153.18	153.18	0.00	0.00	153.18	1.98	0.00	8.74	0.00	142.46	01
		Total :	153.18	153.18	0.00	0.00	153.18	1.98	0.00	8.74	0.00	142.46	01
	Total per Floor:	Typical Floor = 1											
		Total :	153.18	153.18	0.00	0.00	153.18	1.98	0.00	8.74	0.00	142.46	01
GROUND PODIUM FLOOR PLAN	B	OTHER	309.80	309.80	6.34	0.00	303.46	0.34	5.64	9.14	0.00	288.34	08
	C	OTHER	263.78	263.78	5.33	0.00	258.45	1.21	5.73	8.59	0.00	242.92	
	FLAT 02	DWELLING UNIT	106.31	106.31	0.00	3.83	102.48	0.12	1.90	5.79	11.49	83.18	
	FLAT 01	DWELLING UNIT	106.24	106.24	0.00	3.85	102.39	0.00	1.90	5.79	11.46	83.24	
	FLAT 1	DWELLING UNIT	140.77	140.77	3.25	0.00	137.52	0.18	0.37	8.83	15.37	112.77	
	FLAT 2	DWELLING UNIT	140.47	140.47	3.20	0.00	137.27	0.00	0.00	9.91	15.37	111.99	
	FLAT 5	DWELLING UNIT	140.47	140.47	3.20	0.00	137.27	0.00	0.00	9.91	15.37	111.99	
	FLAT 6	DWELLING UNIT	140.47	140.47	3.11	0.00	137.36	0.00	0.00	9.91	15.37	112.08	
	FLAT 7	DWELLING UNIT	140.96	140.96	3.11	0.00	137.85	0.00	0.00	9.61	15.27	112.97	
	FLAT 8	DWELLING UNIT	140.96	140.96	3.11	0.00	137.85	0.00	0.00	9.61	15.27	112.97	
		Total :	1630.23	1630.23	30.65	7.68	1591.90	1.85	15.54	87.09	114.97	1372.45	08
	Total per Floor:	Typical Floor = 1											
		Total :	1630.23	1630.23	30.65	7.68	1591.90	1.85	15.54	87.09	114.97	1372.45	08
TYPICAL - 1, 2, 3, 4, 5, 6, 7, 8, 9, 10, 11, 12, 13, 14, 15& 16 FLOOR PLAN	FLAT 22	DWELLING UNIT	106.31	106.31	0.00	3.83	102.48	0.12	1.90	5.79	11.49	83.18	12
	flat 11	DWELLING UNIT	140.77	140.77	3.25	0.00	137.52	0.18	0.37	8.84	15.37	112.76	
	FLAT 12	DWELLING UNIT	140.47	140.47	3.20	0.00	137.27	0.00	0.00	9.91	15.37	111.99	
	FLAT 13	DWELLING UNIT	140.96	140.96	3.11	0.00	137.85	0.00	0.00	9.58	15.27	113.00	
	FLAT 14	DWELLING UNIT	140.84	140.84	3.20	0.00	137.64	0.00	0.00	10.25	15.37	112.02	
	FLAT 15	DWELLING UNIT	140.47	140.47	3.20	0.00	137.27	0.00	0.00	9.91	15.37	111.99	
	FLAT 16	DWELLING UNIT	140.47	140.47	3.11	0.00	137.36	0.00	0.00	9.91	15.37	112.08	
	FLAT 17	DWELLING UNIT	140.84	140.84	3.20	0.00	137.64	0.00	0.00	10.25	15.37	112.02	
	FLAT 18	DWELLING UNIT	140.96	140.96	3.11	0.00	137.85	0.00	0.00	9.60	15.27	112.98	
	FLAT 21	DWELLING UNIT	106.24	106.24	0.00	3.85	102.39	0.00	1.90	5.79	11.46	83.24	
	FLAT 23	DWELLING UNIT	94.98	94.98	2.89	0.00	92.09	0.00	0.00	0.00	13.98	78.11	
	FLAT24	DWELLING UNIT	94.98	94.98	2.89	0.00	92.09	0.12	2.05	5.49	13.98	70.45	
		Total :	1528.29	1528.29	31.16	7.68	1489.45	0.42	6.22	95.32	173.67	1213.82	12
	Total per Floor:	Typical Floor = 16											
		Total :	24452.64	24452.64	31.16	7.68	23831.20	6.72	99.52	1525.12	2778.72	19421.12	192
SEVENTEENTH FLOOR PLAN	FLAT 1701	DWELLING UNIT	140.76	140.76	3.25	0.00	137.51	0.18	0.37	8.83	15.37	112.76	10
	FLAT 1702	DWELLING UNIT	140.46	140.46	3.20	0.00	137.26	0.00	0.00	9.91	15.37	111.98	
	FLAT 1703	DWELLING UNIT	140.96	140.96	3.11	0.00	137.85	0.00	0.00	9.73	15.27	112.85	
	FLAT 1704	DWELLING UNIT	140.82	140.82	3.20	0.00	137.62	0.00	0.00	10.06	15.37	112.19	
	FLAT 1706	DWELLING UNIT	140.46	140.46	3.11	0.00	137.35	0.00	0.00	9.91	15.37	112.07	
	FLAT 1707	DWELLING UNIT	140.85	140.85	3.20	0.00	137.65	0.00	0.00	10.19	15.37	112.09	
	FLAT 1708	DWELLING UNIT	140.96	140.96	3.11	0.00	137.85	0.00	0.00	9.61	15.27	112.97	
	FLAT 1713	DWELLING UNIT	94.94	94.94	2.89	0.00	92.05	0.12	2.05	5.44	13.98	70.46	
	FLAT1705	DWELLING UNIT	140.46	140.46	3.20	0.00	137.26	0.00	0.00	9.91	15.37	111.98	
	FLAT1714	DWELLING UNIT	94.93	94.93	2.89	0.00	92.04	0.12	2.04	5.39	13.97	70.52	
		Total :	1315.60	1315.60	31.16	0.00	1284.44	0.42	4.46	88.98	150.71	1039.87	10
	Total per Floor:	Typical Floor = 1											
		Total :	1315.60	1315.60	31.16	0.00	1284.44	0.42	4.46	88.98	150.71	1039.87	10
EIGHTEENTH FLOOR PLAN	flat 1811	DWELLING UNIT	140.76	140.76	3.25	0.00	137.51	0.18	0.37	8.83	15.37	112.76	10
	FLAT 1812	DWELLING UNIT	140.46	140.46	3.20	0.00	137.26	0.00	0.00	9.91	15.37	111.98	
	FLAT 1813	DWELLING UNIT	140.96	140.96	3.11	0.00	137.85	0.00	0.00	9.73	15.27	112.85	
	FLAT 1814	DWELLING UNIT	140.82	140.82	3.20	0.00	137.62	0.00	0.00	10.06	15.37	112.19	
	FLAT 1815	DWELLING UNIT	140.46	140.46	3.20	0.00	137.26	0.00	0.00	9.91	15.37	111.98	
	FLAT 1816	DWELLING UNIT	140.46	140.46	3.11	0.00	137.35	0.00	0.00	9.91	15.37	112.07	
	FLAT 1817	DWELLING UNIT	140.85	140.85	3.20	0.00	137.65	0.00	0.00	10.19	15.37	112.09	
	FLAT 1818	DWELLING UNIT	140.96	140.96	3.11	0.00	137.85	0.00	0.00	9.61	15.27	112.97	
	FLAT 1823	DWELLING UNIT	94.94	94.94	2.89	0.00	92.05	0.12	2.05	5.44	13.98	70.46	
	FLAT1824	DWELLING UNIT	94.93	94.93	2.89	0.00	92.04	0.12	2.04	5.39	13.97	70.52	
		Total :	1315.60	1315.60	31.16	0.00	1284.44	0.42	4.46	88.98	150.71	1039.87	10
	Total per Floor:	Typical Floor = 1											
		Total :	1315.60	1315.60	31.16	0.00	1284.44	0.42	4.46	88.98	150.71	1039.87	10
-													
Total:	-	-	28867.25	28867.25	591.84	130.60	28145.16	11.30	123.83	1798.83	3194.72	23015.77	221

SCHEDULE OF WINDOW/VENTILATION:

BUILDING NAME	NAME	LENGTH	HEIGHT	NOS
A (HOUSING)	W2	0.48	2.40	34
A (HOUSING)	W2	0.49	2.40	02
A (HOUSING)	W2	0.60	2.40	68
A (HOUSING)	V1	0.67	1.00	431
A (HOUSING)	W2	0.91	2.10	150
A (HOUSING)	W3	1.09	2.40	02
A (HOUSING)	W3	1.20	2.40	34
A (HOUSING)	W2	1.23	2.40	01
A (HOUSING)	WIN 2	1.24	2.00	01
A (HOUSING)	GL8	1.45	2.40	70
A (HOUSING)	W2	1.51	2.40	01
A (HOUSING)	W2	1.62	2.10	150
A (HOUSING)	JALI	1.62	2.10	41
A (HOUSING)	W1	1.71	2.10	300
A (HOUSING)	GL2	1.71	2.10	150
A (HOUSING)	GL6	1.71	2.40	34
A (HOUSING)	GLASS WINDOW	12.07	1.20	01
A (HOUSING)	GLASS WINDOW	12.79	1.20	01
A (HOUSING)	GL5	2.10	2.40	34
A (HOUSING)	GL10	2.25	2.40	36
A (HOUSING)	GL7	2.27	2.40	34
A (HOUSING)	GL9	2.40	2.40	36
A (HOUSING)	WIN 1	2.50	2.00	08
A (HOUSING)	W'1	2.50	2.40	02
A (HOUSING)	W1	2.50	2.40	02
A (HOUSING)	GL10	2.55	2.40	36
A (HOUSING)	ENTRY	3.43	2.40	02

SCHEDULE OF DOOR:

BUILDING NAME	NAME	LENGTH	HEIGHT	NOS
A (HOUSING)	D4	0.75	2.10	150
A (HOUSING)	D4	0.78	2.40	02
A (HOUSING)	D3	0.80	2.10	1050
A (HOUSING)	D3	0.80	2.40	191
A (HOUSING)	D4	0.90	2.40	70
A (HOUSING)	D2	0.97	2.40	01
A (HOUSING)	D	1.00	2.10	450
A (HOUSING)	ARCH01	1.00	2.10	112
A (HOUSING)	ARCH 02	1.00	2.10	150
A (HOUSING)	D2	1.00	2.40	174
A (HOUSING)	D1	1.05	2.10	150
A (HOUSING)	D1	1.05	2.40	70
A (HOUSING)	w4	1.05	2.40	04
A (HOUSING)	D2	1.08	2.40	01
A (HOUSING)	w3	1.09	2.40	02
A (HOUSING)	ARCH-03	1.09	3.00	150
A (HOUSING)	DOOR	1.50	2.40	02
A (HOUSING)	w2	1.51	2.40	04
A (HOUSING)	LD	1.57	2.10	38
A (HOUSING)	DOOR	1.57	2.40	06
A (HOUSING)	GLASS DOOR	2.00	2.40	09

Balcony Calculations Table

FLOOR	SIZE	AREA	TOTAL AREA
GROUND PODIUM FLOOR PLAN	1.50 X 5.38 X 6 X 1	46.50	114.96
	1.00 X 3.53 X 4 X 1	14.08	
	1.50 X 2.91 X 4 X 1	16.40	
	1.23 X 2.46 X 1 X 1	3.01	
	1.23 X 4.52 X 1 X 1	5.53	
	1.37 X 2.28 X 1 X 1	2.94	
	1.36 X 2.28 X 1 X 1	2.93	
	1.22 X 4.51 X 1 X 1	5.52	
	1.22 X 2.46 X 1 X 1	3.01	
	1.01 X 4.16 X 2 X 1	8.22	
	1.27 X 2.90 X 2 X 1	6.82	
TYPICAL - 1, 2, 3, 4, 5, 6, 7, 8, 9, 10, 11, 12, 13, 14, 15& 16 FLOOR PLAN	1.50 X 2.91 X 6 X 16	393.60	2778.88
	1.00 X 3.53 X 6 X 16	337.92	
	1.50 X 5.38 X 8 X 16	992.00	
	1.01 X 4.16 X 2 X 16	131.52	
	1.22 X 2.46 X 1 X 16	48.16	
	1.22 X 4.51 X 1 X 16	88.32	
	1.36 X 2.28 X 1 X 16	46.88	
	1.37 X 2.28 X 1 X 16	47.04	
	1.23 X 4.52 X 1 X 16	88.48	
	1.23 X 2.46 X 1 X 16	48.16	
	1.23 X 2.97 X 2 X 16	116.48	
	1.22 X 2.51 X 2 X 16	92.16	
	1.23 X 6.10 X 2 X 16	239.04	
	1.27 X 2.90 X 2 X 16	109.12	
SEVENTEENTH FLOOR PLAN	1.50 X 2.91 X 6 X 1	24.60	150.72
	1.00 X 3.53 X 6 X 1	21.12	
	1.50 X 5.38 X 8 X 1	62.00	
	1.22 X 2.97 X 2 X 1	7.26	
	1.22 X 6.09 X 2 X 1	14.88	
	1.22 X 2.51 X 2 X 1	5.82	
	1.01 X 4.16 X 2 X 1	8.22	
	1.27 X 2.90 X 2 X 1	6.82	
EIGHTEENTH FLOOR PLAN	1.50 X 2.91 X 6 X 1	24.60	150.72
	1.00 X 3.53 X 6 X 1	21.12	
	1.50 X 5.38 X 8 X 1	62.00	
	1.22 X 2.97 X 2 X 1	7.26	
	1.22 X 2.51 X 2 X 1	5.82	
	1.22 X 6.09 X 2 X 1	14.88	
	1.01 X 4.16 X 2 X 1	8.22	
	1.27 X 2.90 X 2 X 1	6.82	
Total	-	-	3195.28

ELEVATION

ELEVATION - A (PODIUM SIDE)

ELEVATION

Staircase Checks (Table 8a-1)

Floor Name	StairCase Name	Flight Width	Tread Width	Riser Height	Railing Ht.
BASEMENT FLOOR PLAN	STAIRCASE	1.50	0.300	0.000	1.00
	STAIRCASE	1.50	0.300	0.000	1.00
	STAIRCASE	1.50	0.300	0.000	1.00
	STAIRCASE	1.50	0.300	0.000	1.00
	STAIRCASE	1.50	0.300	0.000	1.00
STILT FLOOR PLAN	STAIRCASE	1.50	0.300	0.150	1.00
	Fire Escape Staircase	1.50	0.300	0.150	1.00
	STAIRCASE	1.50	0.300	0.150	1.00
	STAIRCASE	1.50	0.300	0.150	1.00
	Fire Escape Staircase	1.50	0.300	0.150	1.00
GROUND PODIUM FLOOR PLAN	STAIRCASE	1.50	0.300	0.150	1.00
	STAIRCASE	1.50	0.300	0.150	1.00
	STAIRCASE	1.50	0.300	0.150	1.00
	Fire Escape Staircase	1.50	0.300	0.150	1.00
	Fire Escape Staircase	1.50	0.300	0.150	1.00
TYPICAL - 1, 2, 3, 4, 5, 6, 7, 8, 9, 10, 11, 12, 13, 14, 15& 16 FLOOR PLAN	STAIRCASE	1.50	0.300	0.150	1.00
	STAIRCASE	1.50	0.300	0.150	1.00
	STAIRCASE	1.50	0.300	0.150	1.00
	Fire Escape Staircase	1.50	0.300	0.150	1.00
	Fire Escape Staircase	1.50	0.300	0.150	1.00
SEVENTEENTH FLOOR PLAN	STAIRCASE	1.50	0.300	0.150	1.00
	STAIRCASE	1.50	0.300	0.150	1.00
	STAIRCASE	1.50	0.300	0.150	1.00
	Fire Escape Staircase	1.50	0.300	0.150	1.00
	Fire Escape Staircase	1.50	0.300	0.150	1.00
EIGHTEENTH FLOOR PLAN	STAIRCASE	1.50	0.300	0.150	1.00
	STAIRCASE	1.50	0.300	0.150	1.00
	STAIRCASE	1.50	0.300	0.150	1.00
	Fire Escape Staircase	1.50	0.300	0.150	1.00
	Fire Escape Staircase	1.50	0.300	0.150	1.00
TERRACE FLOOR PLAN	STAIRCASE	1.50	0.300	0.000	1.00
	STAIRCASE	1.50	0.300	0.000	1.00
	STAIRCASE	1.50	0.300	0.000	1.00
	Fire Escape Staircase	1.50	0.300	0.000	1.00
	Fire Escape Staircase	1.50	0.300	0.000	1.00

OWNER'S NAME AND SIGNATURE

SHALIMAR KSMB PROJECTS Throu. Autho. Sign Mr. Sheo Janam Chaudhary,architect@shalimar.org,8800284006

ARCH/ENG'S NAME AND SIGNATURE ENGINEER

Rajneesh Kumar

CA/2017/86949
Digitally signed by Rajneesh Kumar
Date: 29 May 2023 11:27:00
Designation :Architect

Lucknow Development Authority

Digitally signed by INDRA MANI TRIPATHI
Date: 02 Jun 2023 10:28:11
Organization :Lucknow Development Authority
Designation :Vice Chairman

Building Plan Application Number
LDA/BP/22-23/2854

Sanctioned On
02 May 2023

Valid Till
28 May 2028

Approved By
Vice Chairman (Vice Chairman)

Examined By
Satish Kumar Yadav (Junior engineer)
Lakshman Singh (Junior engineer)
Rajesh Sharma (Assistant Engineer)
Kaushvendra Kumar Gautam (Executive engineer/Town Planner)
Gyanendra Verma (Chief Town Planner)
Pawan kumar Gangwar (Secretory)

Note: - 1) This drawing is prepared as per the current prevailing Building Bye Laws.
2) If Map sanctioned is used for purpose anything other than stated in application will lead to rejection of Map.

Total Plot Area: - 10336.12	Total FAR Area: - 30357.47
Total Coverage Area: - 1969.11	Total BUA Area: - 44424.41

ISO_A0_(841.00_x_1189.00_MM)

The correctness and accuracy of Proposal Information and drawing is a responsibilty of POR/owner. Accuracy of Scrutiny Report is subject to accuracy of end-user provided data, 3rd party software/hardware/services, etc. SoftTech Engineers Ltd. is not liable for any damages which may arise from use, or inability to use the Application. Texts printed in 'Italics' and 'Blue' color are user inputs, which are not verified and not generated by scrutiny software.

Project Title :PROPOSED GROUP HOUSING AT PLOT GROUP HOUSING NO -2 HAVING KHASRA NO. 233 PART 234 PART,235 PART 236 PART 237 & PART 238 GARDEN BAY AT VILLA GHAILA & ALINAGAR THROUGH AUTO SIGN MR. SHEO JANAM CHAUDHARY

File No	LDA/BP/22-23/2854	Sheet	8
Submission Date	2023-04-08	Scale	1:100

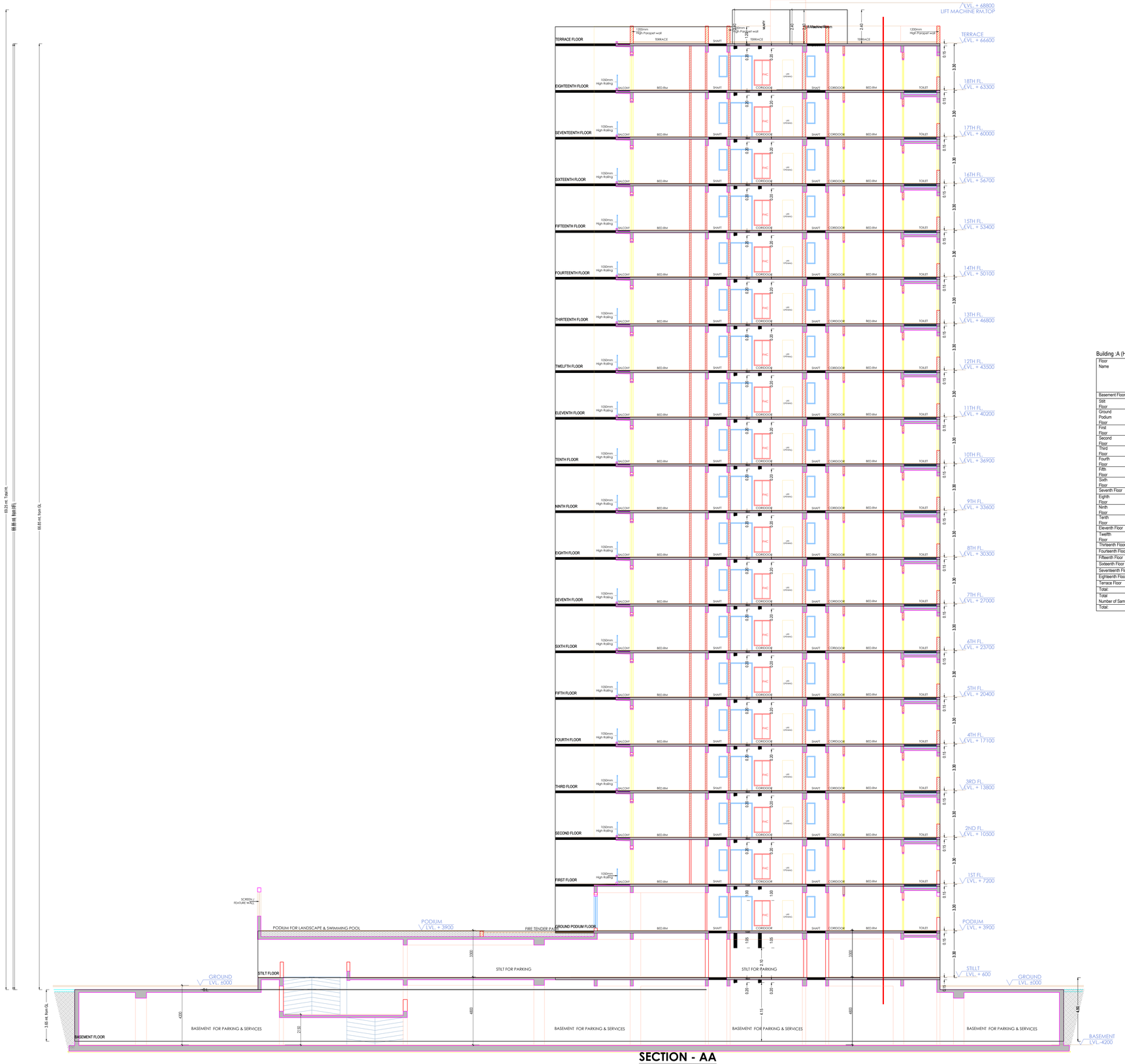

SECTION - AA

SECTION AT B-B

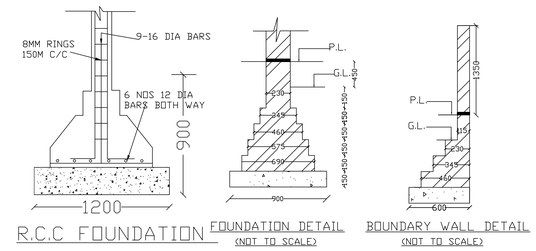

R.C.C FOUNDATION

N.T.S.

FOUNDATION DETAIL
(NOT TO SCALE)

BOUNDARY WALL DETAIL
(NOT TO SCALE)

Building :A (HOUSING)

Floor Name	Gross Builtup Area	Deductions From Gross BUA(Area in Sq.mt.)		Total Built Up Area (Sq.mt.)	Deductions (Area in Sq.mt.)									Proposed FAR Area (Sq.mt.)		Total FAR Area (Sq.mt.)	No. of Unit
		OTS	Void		Mumty	Lift	Lift Machine	Lift Lobby	Balcony	Accessory Use	Ramp	Covered Area	Parking	Resi.	Amenities		
Basement Floor	7902.70	0.00	0.00	7902.70	106.43	32.08	0.00	7.46	0.00	0.00	220.85	0.00	7535.88	0.00	0.00	0.00	00
Stilt Floor	979.93	0.00	4.49	975.44	105.69	31.81	0.00	0.00	0.00	0.00	327.86	354.98	0.08	0.00	508.16	508.16	01
Ground Podium Floor	2301.49	31.63	35.16	2234.72	39.60	31.82	0.00	35.62	0.00	189.02	198.76	0.00	0.00	1176.01	563.90	1739.91	08
First Floor	1926.95	31.63	35.68	1859.68	39.60	31.82	0.00	35.62	173.65	0.00	0.00	0.00	0.00	1578.99	0.00	1578.99	12
Second Floor	1926.95	31.63	35.68	1859.68	39.60	31.82	0.00	35.62	173.65	0.00	0.00	0.00	0.00	1578.99	0.00	1578.99	12
Third Floor	1926.95	31.63	35.68	1859.68	39.60	31.82	0.00	35.62	173.65	0.00	0.00	0.00	0.00	1578.99	0.00	1578.99	12
Fourth Floor	1926.95	31.63	35.68	1859.68	39.60	31.82	0.00	35.62	173.65	0.00	0.00	0.00	0.00	1578.99	0.00	1578.99	12
Fifth Floor	1926.95	31.63	35.68	1859.68	39.60	31.82	0.00	35.62	173.65	0.00	0.00	0.00	0.00	1578.99	0.00	1578.99	12
Sixth Floor	1926.95	31.63	35.68	1859.68	39.60	31.82	0.00	35.62	173.65	0.00	0.00	0.00	0.00	1578.99	0.00	1578.99	12
Seventh Floor	1926.95	31.63	35.68	1859.68	39.60	31.82	0.00	35.62	173.65	0.00	0.00	0.00	0.00	1578.99	0.00	1578.99	12
Eighth Floor	1926.95	31.63	35.68	1859.68	39.60	31.82	0.00	35.62	173.65	0.00	0.00	0.00	0.00	1578.99	0.00	1578.99	12
Ninth Floor	1926.95	31.63	35.68	1859.68	39.60	31.82	0.00	35.62	173.65	0.00	0.00	0.00	0.00	1578.99	0.00	1578.99	12
Tenth Floor	1926.95	31.63	35.68	1859.68	39.60	31.82	0.00	35.62	173.65	0.00	0.00	0.00	0.00	1578.99	0.00	1578.99	12
Eleventh Floor	1926.95	31.63	35.68	1859.68	39.60	31.82	0.00	35.62	173.65	0.00	0.00	0.00	0.00	1578.99	0.00	1578.99	12
Twelfth Floor	1926.95	31.63	35.68	1859.68	39.60	31.82	0.00	35.62	173.65	0.00	0.00	0.00	0.00	1578.99	0.00	1578.99	12
Thirteenth Floor	1926.95	31.63	35.68	1859.68	39.60	31.82	0.00	35.62	173.65	0.00	0.00	0.00	0.00	1578.99	0.00	1578.99	12
Fourteenth Floor	1926.95	31.63	35.68	1859.68	39.60	31.82	0.00	35.62	173.65	0.00	0.00	0.00	0.00	1578.99	0.00	1578.99	12
Fifteenth Floor	1926.95	31.63	35.68	1859.68	39.60	31.82	0.00	35.62	173.65	0.00	0.00	0.00	0.00	1578.99	0.00	1578.99	12
Sixteenth Floor	1926.95	31.63	35.68	1859.68	39.60	31.82	0.00	35.62	173.65	0.00	0.00	0.00	0.00	1578.99	0.00	1578.99	12
Seventeenth Floor	1724.83	23.95	35.68	1665.24	39.60	31.82	0.00	35.60	150.69	0.00	0.00	0.00	0.00	1407.52	0.00	1407.52	10
Eighteenth Floor	1682.81	23.95	35.68	1658.86	39.60	31.82	0.00	35.60	150.69	0.00	0.00	0.00	0.00	1401.16	0.00	1401.16	10
Terrace Floor	169.62	0.00	0.00	145.67	105.68	0.00	32.57	7.42	0.00	0.00	0.00	0.00	0.00	0.00	0.00	0.00	00
Total:	45592.64	585.61	681.89	44337.57	1070.20	668.47	32.57	691.62	3194.73	189.02	747.47	354.98	7535.96	29248.53	1072.06	30320.63	221
Total Number of Same Buildings: 1																	
Total:	45592.64	585.61	681.89	44337.57	1070.20	668.47	32.57	691.62	3194.73	189.02	747.47	354.98	7535.96	29248.53	1072.06	30320.63	221

OWNER'S NAME AND SIGNATURE

SHALIMAR KSMB PROJECTS Throu. Autho. Sign Mr. Sheo Janam Chaudhary,architect@shalimar.org,8800284006

ARCH/ENG'S NAME AND SIGNATURE ENGINEER

Rajneesh Kumar

CA/2017/86949
Digitally signed by Rajneesh Kumar
Date: 29 May 2023 12:27:00
Designation : Architect

Lucknow Development Authority

Digitally signed by NIDHI
Date: 2023.05.31 11:55:11 +05'30'
Designation : Junior Engineer
Development Authority
Designation : Vice Chairman

Building Plan Application Number

LDA/BP/22-23/2854

Sanctioned On

02 May 2023

Valid Till

28 May 2028

Approved By

Vice Chairman (Vice Chairman)

Examined By

Satish Kumar Yadav (Junior engineer)

Lakshman Singh (Junior engineer)

Rajesh Sharma (Assistant Engineer)

Kaushvendra Kumar Gautam (Executive engineer/Town Planner)

Gyanendra Verma (Chief Town Planner)

Pawan kumar Gangwar (Secretory)

Note: - 1) This drawing is prepared as per the current prevailing Building Bye Laws.
2) If Map sanctioned is used for purpose anything other than stated in application will lead to rejection of Map.

Total Plot Area: -	10336.12	Total FAR Area: -	30357.47
Total Coverage Area: -	1969.11	Total BUA Area: -	44424.41

ISO_A0_(841.00_x_1189.00_MM)

The correctness and accuracy of Proposal Information and drawing is a responsibility of PORowner. Accuracy of Scrutiny Report is subject to accuracy of end-user provided data, 3rd party software/hardware/services, etc. SoftTech Engineers Ltd. is not liable for any damages which may arise from use, or inability to use the Application. Texts printed in 'Italics' and 'Blue' color are user inputs, which are not verified and not generated by scrutiny software.