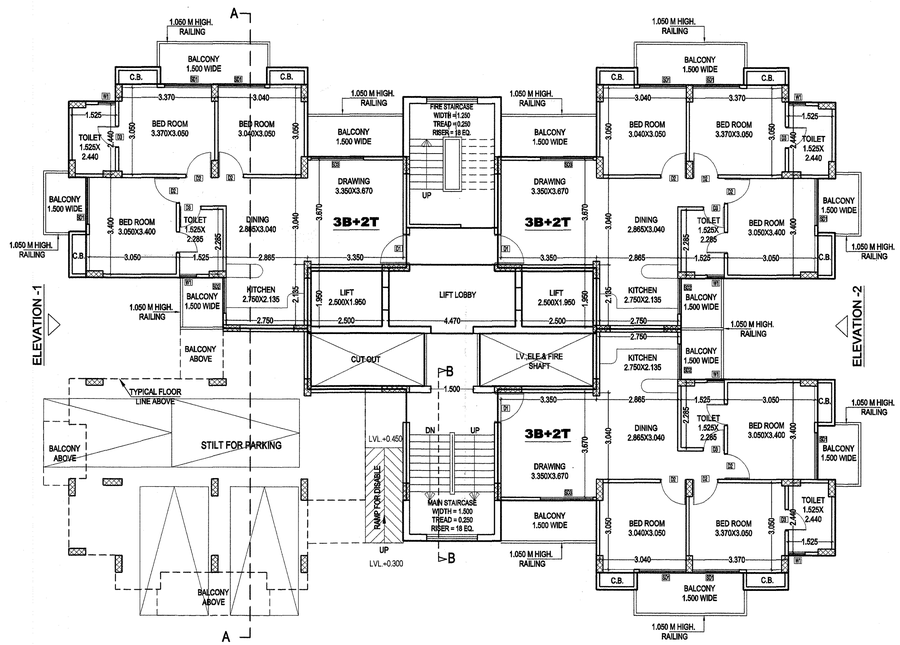

GROUND/STILT FLOOR PLAN

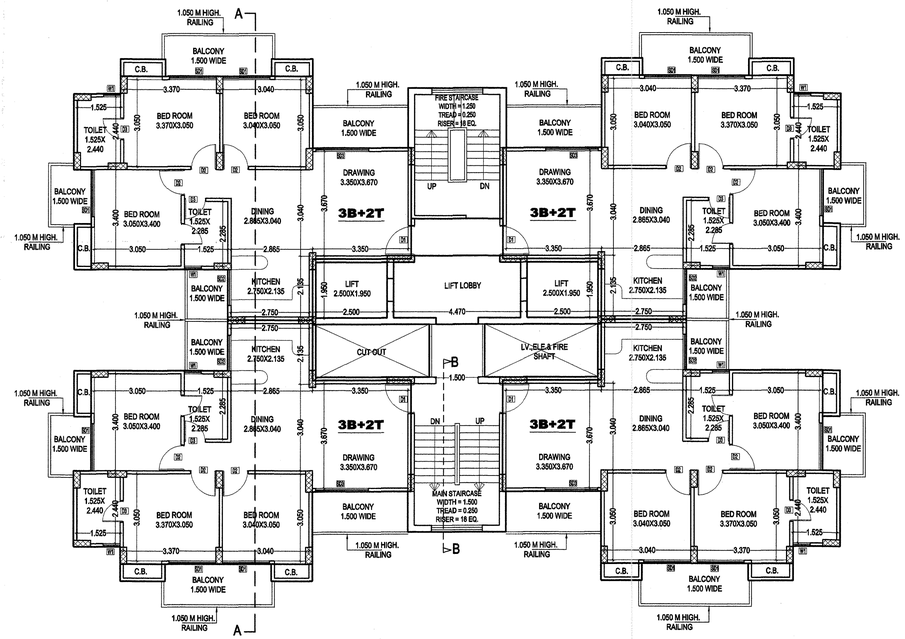

TYPICAL FLOOR PLAN (1st to 13th)

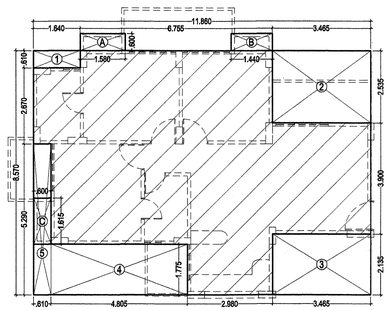

3B+2T

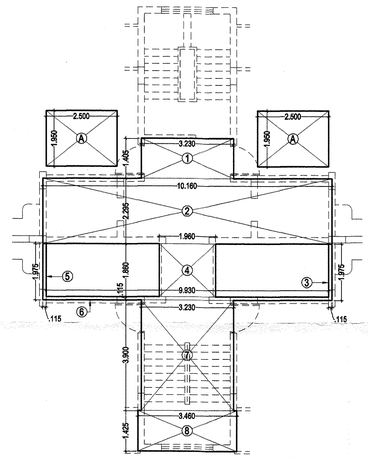

CIRCULATION AREA CALCULATION

3B+2T					
UNIT AREA = (11.860x 8.570) = 101.640 - 28.938 (LESS AREA) = 72.702 SQ.MT.					
S.NO	LENGTH		WIDTH		LESS AREA (SQ.MT.)
1	1.640	x	0.610	=	1.000
2	3.465	x	2.535	=	8.784
3	3.465	x	2.135	=	7.398
4	4.805	x	1.775	=	8.529
5	0.610	x	5.290	=	3.227
TOTAL				=	28.938
CUP-BOARD AREA CALCULATION (Not include in F.A.R)					
A	1.580	x	0.600	=	0.948
B	1.440	x	0.600		0.864
C	0.600	x	1.615	=	0.969
TOTAL				=	2.781

GROUND FL. AREA = TYPICAL CORE AREA + {AX2) = 31.123 + {(2.500x1.950)+(2.500X1.950)} = 40.873 SQ.MT.

TYPICAL CORE AREA = TOTAL AREA - {2XA+B+C+D+E+F} = 50.625 - [{(2.500x1.950)+(2.500X1.950) +9.750 = 31.123 SQ.MT.

S.NO	LENGTH		WIDTH		AREA (SQ.MT.)
1	3.230	x	1.405	=	4.538
2	10.160	x	2.295	=	23.317
3	0.115	x	1.975	=	0.227
4	1.960	x	1.860	=	3.646
5	0.115	x	1.975	=	0.227
6	9.930	x	0.115	=	1.142
7	3.230	x	3.900	=	12.597
8	3.460	x	1.425	=	4.931
TOTAL CORE AREA				=	50.625

GROUND COVERAGE AREA DETAIL = [STILT + {(3B+2T+C.B.)x3} + TOTAL CORE AREA + FIRE STAIR]

(75.483 + 226.450 + 50.625 + 15.325) = 367.882 SQ.MT.

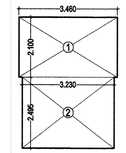

FIRE STAIRCASE AREA DIAGRAM

FIRE STAIR AREA (SQ.MT.)					
SNO.	LENGTH		WIDTH		AREA (SQ.MT.)
1	3.460	x	2.100	=	7.266
2	3.230	x	2.495	=	8.059
TOTAL				=	15.325

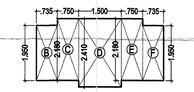

LOBBY AREA DIAGRAM

(MAX. 10 SQ.MT. ALLOWED)

LIFT LOBBY AREA (SQ.MT.)					
SNO.	LENGTH		WIDTH		AREA (SQ.MT.)
B	0.735	x	1.950	=	1.433
C	0.750	x	2.180	=	1.635
D	1.500	x	2.410	=	3.615
E	0.750	x	2.180	=	1.635
F	0.735	x	1.950	=	1.433
TOTAL				=	9.752

(TOWER-F) S-14

GR./STILT, TYPICAL FLOOR PLAN & AREA CHART

DOORS & WINDOWS SCHEDULE

S.NO.	TYPE	SIZE	S.LVL	L.LVL.
1	D1	1.050x2.100	±00	2.100
2	D2	0.900x2.100	±00	2.100
3	D3	0.750x2.100	±00	2.100
4	D4	0.635x2.100	±00	2.100
5	D5	1.000x2.100	±00	2.100
6	SD1	1.800x2.500	±00+0.450	2.500
7	SD2	1.240x2.500	±00+1.050	2.500
8	SD3	1.800x2.500	±00+0.450	2.500
9	SD4	1.510x2.500	±00+0.450	2.500
10	DW5	1.165x2.500	±00+1.050	2.500
11	SD6	2.100x2.500	±00+0.450	2.500
12	W1	0.600x1.450	+1.050	2.500
13	W2	0.900x1.450	+1.050	2.500
14	W3	0.915x1.800	+0.900	2.500
15	W4	0.665x1.800	+0.900	2.500
16	W5	0.650x1.800	+0.900	2.500

Map for proposed Building is as per Bye Laws submitted for approval Please.

Pl. Asstt. Asstt. Arch Architect

PROJECT TITLE :

REVISED GROUP HOUSING AT PLOT NO.GH-17, SEC- 75,NOIDA. FOR - M/S MAXBLIS CONSTRUCTION PVT. LTD.

DRAWING TITLE:-

GR./STILT, TYPICAL FLOOR PLAN & AREA CHART TOWER - F (G/S+13)

DRG NO. S-14

SCALE	1:100
DATE	20130304
DEALT	
JOB NO.	\\Cmsc02\D\DATA\15_75_GARDENIA\20130223_SUBMISSION 120130223_SUBMISSION

DEEPAK MEHTA & ASSOCIATES

ARCHITECTS, PLANNERS, VALUERS, LANDSCAPE & INTERIOR

PLOT NO. 16 ABHISHEK PLAZA I.S.C. MAYUR VIHAR PH. I DELHI-91

PH: 65273180 TELEFAX: 22770180

Architect Deepak Mehta
CO/A/C/10840
Plot No. 16 Abhishek Plaza LSC
Mayur Vihar Ph-II, Delhi-91

ARCHITECT'S SIGN

For MAXBLIS CONSTRUCTION PVT. LTD.

Authorised Signatory

OWNER'S SIGN

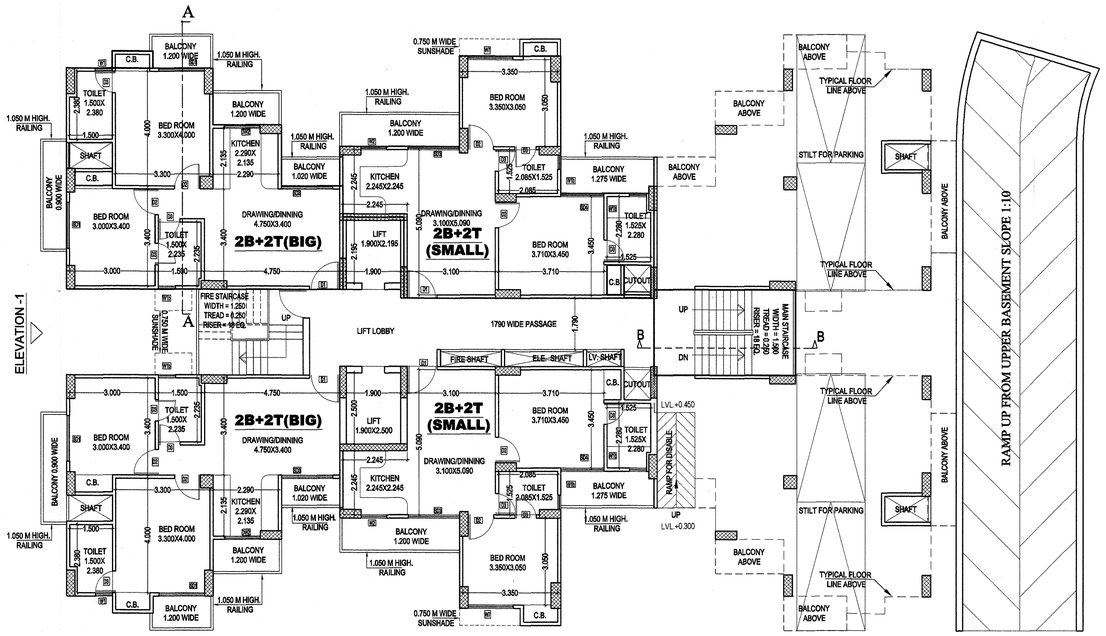

GROUND/STILT FLOOR PLAN

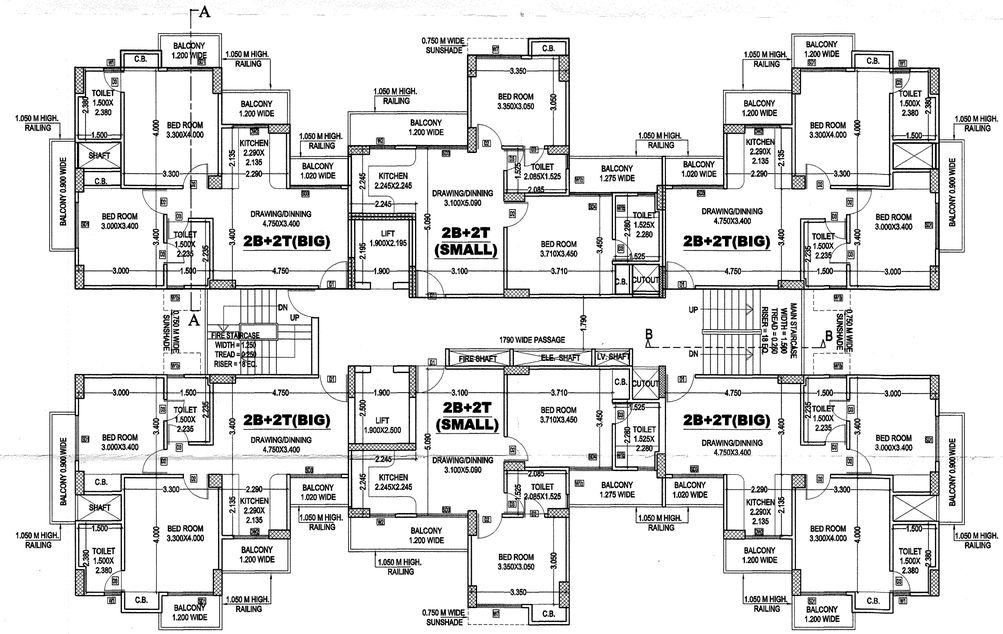

TYPICAL FLOOR PLAN (1st to 13th)

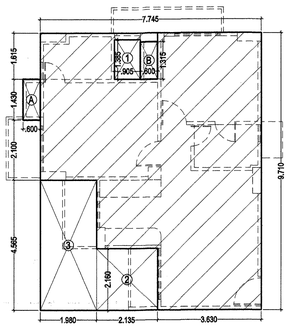

2B+2T(big)

2B+2T(BIG)					
UNIT AREA = (7.745 x 9.710) = 75.204 - 15.693 (LESS AREA) = 59.511 SQ.MT.					
S.NO	LENGTH		WIDTH		LESS AREA (SQ.MT.)
1	0.905	x	1.385	=	1.253
B	0.600	x	1.315	=	0.789
2	2.135	x	2.160	=	4.612
3	1.980	x	4.565	=	9.039
TOTAL				=	15.693
CUP-BOARD AREA CALCULATION (Not include in F.A.R)					
A	0.600	x	1.430	=	0.858
B	0.600	x	1.315	=	0.789
TOTAL				=	1.647

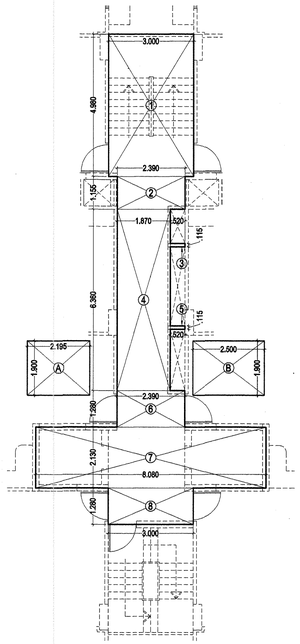

CIRCULATION AREA CALCULATION

GROUND FL. AREA = TYPICAL CORE AREA + {(A+B) = 38.577 + (2.195x1.900)-(2.500x1.900)} = 47.498 SQ.MT.					
TYPICAL CORE AREA = TOTAL AREA - {(A+B+C+D) = 53.823 - [(2.195x1.900)-(2.500x1.900) + 6.325] = 38.577 SQ.MT.					
S.NO	LENGTH		WIDTH		AREA (SQ.MT.)
1	3.000	x	4.980	=	14.940
2	2.390	x	1.155	=	2.760
3	0.520	x	0.115	=	0.060
4	1.870	x	6.360	=	11.893
5	0.520	x	0.115	=	0.060
6	2.390	x	1.280	=	3.059
7	8.080	x	2.130	=	17.210
8	3.000	x	1.280	=	3.840
TOTAL CORE AREA				=	53.823
GROUND COVERAGE AREA DETAIL = {(2B+2T(SMALL)+C.B.)x2 + (2B+2T(BIG)+C.B.)x4} + (58.232)X2 + 61.158X4 + 53.823 + 11.595) = 426.514 SQ.MT.					

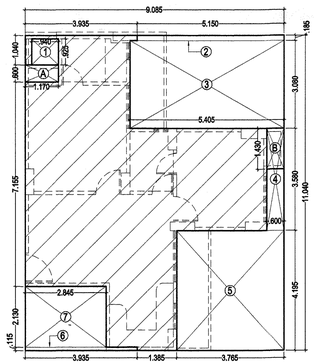

2B+2T(small)

2B+2T(SMALL)					
UNIT AREA = (9.085 x 11.040) = 100.298 - 43.626 (LESS AREA) = 56.672 SQ.MT.					
S.NO	LENGTH		WIDTH		LESS AREA (SQ.MT.)
A	1.170	x	0.600	=	0.702
1	0.940	x	0.925	=	0.870
2	5.150	x	0.185	=	0.953
3	5.405	x	3.080	=	16.647
4	0.600	x	3.580	=	2.148
5	3.765	x	4.195	=	15.794
6	3.935	x	0.115	=	0.453
7	2.845	x	2.130	=	6.060
TOTAL				=	43.626
CUP-BOARD AREA CALCULATION (Not include in F.A.R)					
A	1.170	x	0.600	=	0.702
B	0.600	x	1.430	=	0.858
TOTAL				=	1.560

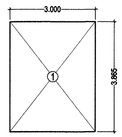

FIRE STAIRCASE AREA DIAGRAM

FIRE STAIR AREA (SQ.MT.)					
SNO.	LENGTH		WIDTH		AREA (SQ.MT.)
1	3.000	x	3.865	=	11.595
TOTAL				=	11.595

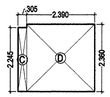

LOBBY AREA DIAGRAM

(MAX. 10 SQ.MT. ALLOWED)

LIFT LOBBY AREA (SQ.MT.)					
SNO.	LENGTH		WIDTH		AREA (SQ.MT.)
C	0.305	x	2.245	=	0.685
D	2.390	x	2.360	=	5.640
TOTAL				=	6.325

(TOWER- G) S-16

GR./STILT, TYPICAL FLOOR PLAN & AREA CHART

DOORS & WINDOWS SCREDULE				
S.NO.	TYPE	SIZE	S.LVL.	L.LVL.
1	D1	1.050x2.100	±00	2.100
2	D2	0.900x2.100	±00	2.100
3	D3	0.750x2.100	±00	2.100
4	D4	0.635x2.100	±00	2.100
5	D5	1.000x2.100	±00	2.100
6	SD1	1.600x2.500	±00/+0.450	2.500
7	SD2	1.240x2.500	±00/+1.050	2.500
8	SD3	1.800x2.500	±00/+0.450	2.500
9	SD4	1.510x2.500	±00/+0.450	2.500
10	DW5	1.165x2.500	±00/+1.050	2.500
11	SD6	2.100x2.500	±00/+0.450	2.500
12	W1	0.660x1.450	+1.050	2.500
13	W2	0.900x1.450	+1.050	2.500
14	W3	0.915x1.800	+0.900	2.500
15	W4	0.665x1.800	+0.900	2.500
16	W5	0.650x1.800	+0.900	2.500

PROJECT TITLE :

REVISED GROUP HOUSING AT PLOT NO.GH-17, SEC- 75,NOIDA. FOR - M/S MAXBLIS CONSTRUCTION PVT. LTD.

DRAWING TITLE-

GR./STILT, TYPICAL FLOOR PLAN & AREA CHART TOWER - G (G/S+13)

DRG NO. S-16

SCALE	1:100
DATE	20130304
DEALT	
JOB NO.	\\Ceno7210\DATA\11-75,GARDENA\20130223_SUBMISSION 120130223_SUBMISSION

DEEPAK MEHTA & ASSOCIATES

ARCHITECTS, PLANNERS, VALUERS.
PLOT NO. 16 ABHISHEK PLAZA L.S.C. MAYUR VIHAR PH II DELHI-91
PH. 65272180 TELEFAX: 22770160

Architect Deepak Mehta
COA/87/10640
Plot No. 16 Abhishek Plaza LSC
Mayur Vihar Ph-II, Delhi-91

ARCHITECT'S SIGN

For MAXBLIS CONSTRUCTION PVT. LTD.

Authorised Signatory

OWNER'S SIGN

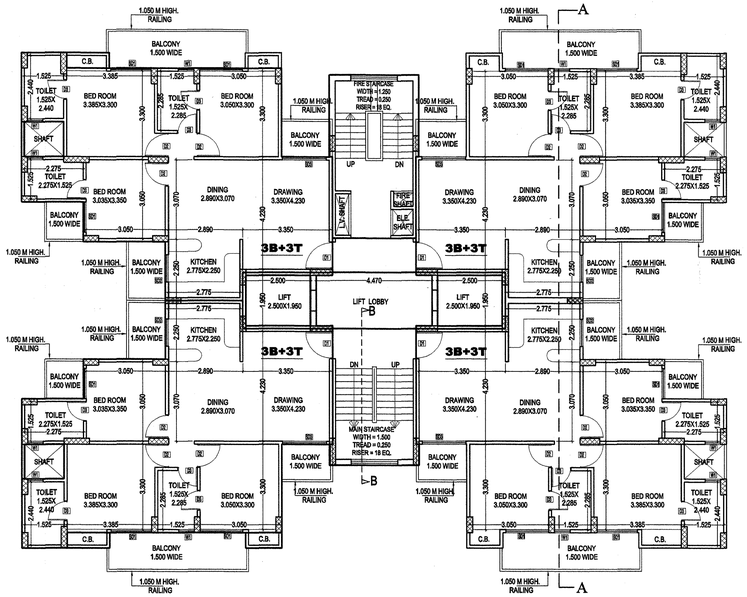

TYPICAL FLOOR PLAN (2nd to 13th)

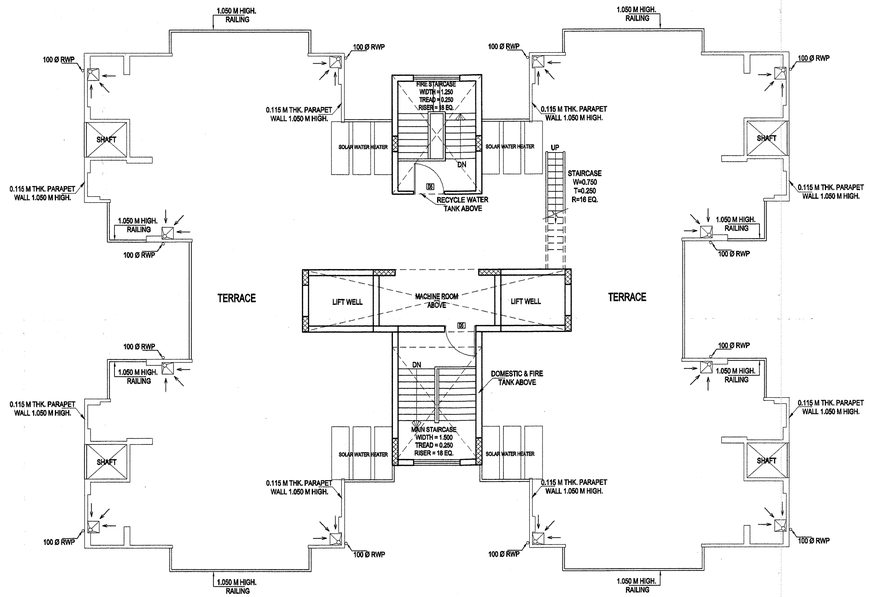

TERRACE PLAN

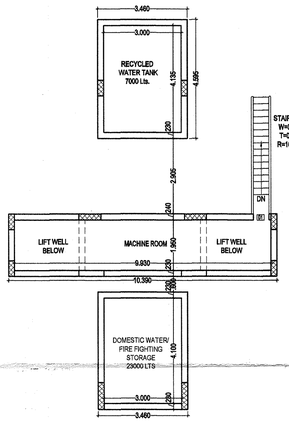

MACHINE ROOM & OVER HEAD WATER TANK

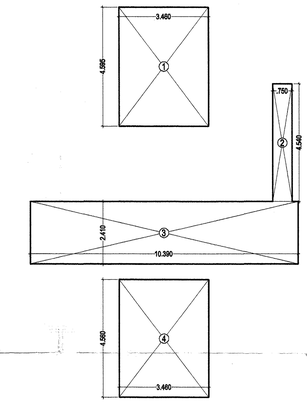

MACHINE ROOM & MUMTY AREA DIAGRAM

MACHINE RM. & MUMTY AREA					
SNO.	LENGTH		WIDTH		AREA (SQ.MT.)
1	3.460	x	4.595	=	15.899
2	0.750	x	4.540	=	3.405
3	10.390	x	2.410	=	25.040
4	3.460	x	4.560	=	15.778
TOTAL				=	60.121

TOWER H

	3B+3T	3B+3T	3B+3T	3B+3T		Entrance Lobby area	Commer-cial	Core area	Total FAR	Cupboard Area per floor	Ground Coverage	Fire stair (Non FAR)	Stilt	M/R, mumty (Non FAR)	Actual Lobby area (FOR REFF.)	Lobby area Ancillary area	LIFT SHAFT Ancillary area		Ancillary area	Nos. of units
	1	2	3	4	5	6	7	8	9	10	11	12	13	14		15	16	17	18	19
									(1 to 8)		9+10+12+13 +15+16+17								10+12+14+1 5+16+17	
Area details	80.064	80.064	80.064	80.064		8.251	467.279	34.163		7.320	704.049	21.109	0.000	60.121	9.459	9.459	9.750			
Ground / Stilt Floor	80.064	80.064				8.251	467.279	34.163	669.821	3.660	704.049	21.109	0.000		9.459	9.459			34.228	2
First Floor	80.064	80.064	80.064	80.064				24.413	344.669	7.320		21.109			9.459	9.459	9.750		47.638	4
Second Floor	80.064	80.064	80.064	80.064				24.413	344.669	7.320		21.109			9.459	9.459	9.750		47.638	4
Third Floor	80.064	80.064	80.064	80.064				24.413	344.669	7.320		21.109			9.459	9.459	9.750		47.638	4
Fourth Floor	80.064	80.064	80.064	80.064				24.413	344.669	7.320		21.109			9.459	9.459	9.750		47.638	4
Fifth Floor	80.064	80.064	80.064	80.064				24.413	344.669	7.320		21.109			9.459	9.459	9.750		47.638	4
Sixth Floor	80.064	80.064	80.064	80.064				24.413	344.669	7.320		21.109			9.459	9.459	9.750		47.638	4
Seventh Floor	80.064	80.064	80.064	80.064				24.413	344.669	7.320		21.109			9.459	9.459	9.750		47.638	4
Eighth Floor	80.064	80.064	80.064	80.064				24.413	344.669	7.320		21.109			9.459	9.459	9.750		47.638	4
Ninth Floor	80.064	80.064	80.064	80.064				24.413	344.669	7.320		21.109			9.459	9.459	9.750		47.638	4
Tenth Floor	80.064	80.064	80.064	80.064				24.413	344.669	7.320		21.109			9.459	9.459	9.750		47.638	4
Eleventh Floor	80.064	80.064	80.064	80.064				24.413	344.669	7.320		21.109			9.459	9.459	9.750		47.638	4
Twelth Floor	80.064	80.064	80.064	80.064				24.413	344.669	7.320		21.109			9.459	9.459	9.750		47.638	4
Thirteenth Floor	80.064	80.064	80.064	80.064				24.413	344.669	7.320		21.109			9.459	9.459	9.750		47.638	4
M/R, mumty														60.121					60.121	
Total									5150.518		704.049		0.000						713.643	54

(TOWER- H)

S-19

TYPICAL ,TERRACE FLOOR PLAN & AREA CHART could be demolished also. Floor ... construct building

DOORS & WINDOWS SCHEDULE

S.NO.	TYPE	SIZE	S.LVL.	L.LVL.
1	D1	1.050x2.100	±00	2.100
2	D2	0.900x2.100	±00	2.100
3	D3	0.750x2.100	±00	2.100
4	D4	0.675x2.100	±00	2.100
5	D5	1.000x2.100	±00	2.100
6	SD1	1.800x2.500	±00/+0.450	2.500
7	SD2	1.240x2.500	±00/+1.050	2.500
8	SD3	1.800x2.500	±00/+0.450	2.500
9	SD4	1.510x2.500	±00/+0.450	2.500
10	DW5	1.165x2.500	±00/+1.050	2.500
11	SD6	2.100x2.500	±00/+0.450	2.500
12	W1	0.600x1.450	+1.050	2.500
13	W2	0.900x1.450	+1.050	2.500
14	W3	0.915x1.500	+0.900	2.500
15	W4	0.885x1.500	+0.900	2.500
16	W5	0.650x1.500	+0.900	2.500

Map for proposed Building is as per Bye Laws submitted for approval Please.

Pl. Asstt. Asstt. Arch Architect

PROJECT TITLE :

REVISED GROUP HOUSING AT PLOT NO.GH-17, SEC- 75,NOIDA. FOR - M/S MAXBLIS CONSTRUCTION PVT. LTD.

DRAWING TITLE:-

TYPICAL,TERRACE FLOOR PLAN & AREA CHART TOWER - H (G/C+13)

S-19

DRG NO.

SCALE	1:100
DATE	20130304
DEALT	
JOB NO.	\\Comp12\D\DATA\97-75,GARDENIA\20130223_SUBMISSION \20130223_SUBMISSION

DEEPAK MEHTA & ASSOCIATES
ARCHITECTS, PLANNERS, VALUERS, LANDSCAPE & INTERIORS
PLOT NO. 16 ABHISHEK PLAZA L.S.C. MAYUR VIHAR PH II DELHI 91
PH: 65272180 TELEFAX: 22770180

Architect Deepak Mehta
Reg. No. A/10840
Plot No. 16 Abhishek Plaza LSC
Mayur Vihar Ph-II, Delhi-91

ARCHITECT'S SIGN

For MAXBLIS CONSTRUCTION PVT. LTD.

Authorised Signatory

OWNER'S SIGN