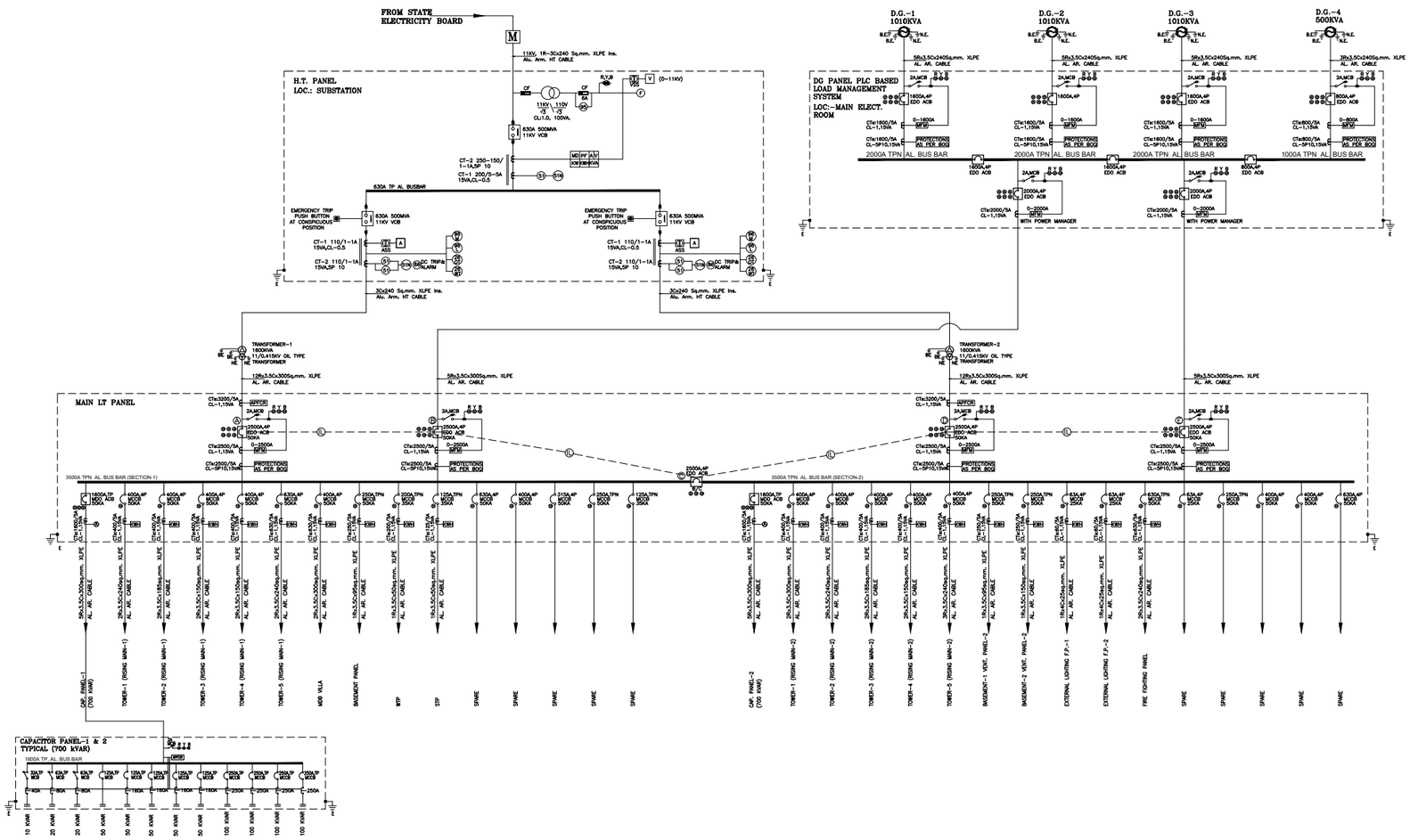

LEGEND:-

M KWH	HT METER
	AIR CIRCUIT BREAKER (ACB)
	VACCUM CIRCUIT BREAKER (VCB)
	CURRENT TRANSFORMER (CT)
	MOULDED CASE CIRCUIT BREAKER (MCCB)
	MINIATURE CIRCUIT BREAKER (MCB)
	TRANSFORMER
E/L	ELECTRICAL INTER LOCKING
	D.G. SET
	EARTHING
KWH	DUAL SOURCE METER
MFM	MULTI FUNCTIONAL METER WITH POWER MANAGER
APFCR	AUTOMATIC POWER FACTOR CORRECTION RELAY
⊗	LED INDICATING LAMPS
EDO	ELECTRICAL DRAW OUT

DATE	REVISION	DESCRIPTION	BY

V.S. KUKREJA & ASSOCIATES PVT. LTD.
CONSULTING ENGINEERS
165-A,GAUTAM NAGAR
NEW DELHI-110049 PH:26521075/76
FAX. 26967867
EMAIL:info@vskukreja.com
EMAIL:vskukreja@gmail.com

ARCHITECTS:

ANDLEYS ASSOCIATES PVT.LTD.
ARCHITECT ENGINEERS PLANNERS
39 HOUSING SOCIETY N.D.S.E.-I NEW DELHI - 110049

PROJECT:

GROUP HOUSING FOR **APEX**
SECTOR-75 AT NOIDA. (U.P.)

TITLE:

ELECTRICAL MAIN SLD

JOB NO.	VKPL-1975
DATE	02-11-2016
SCALE	N.T.S
DRAWN	JAGJEET
CHKD. BY	ROHIT BISLA

EL/SLD-01

F:\DRAWINGS & DOCUMENTS\