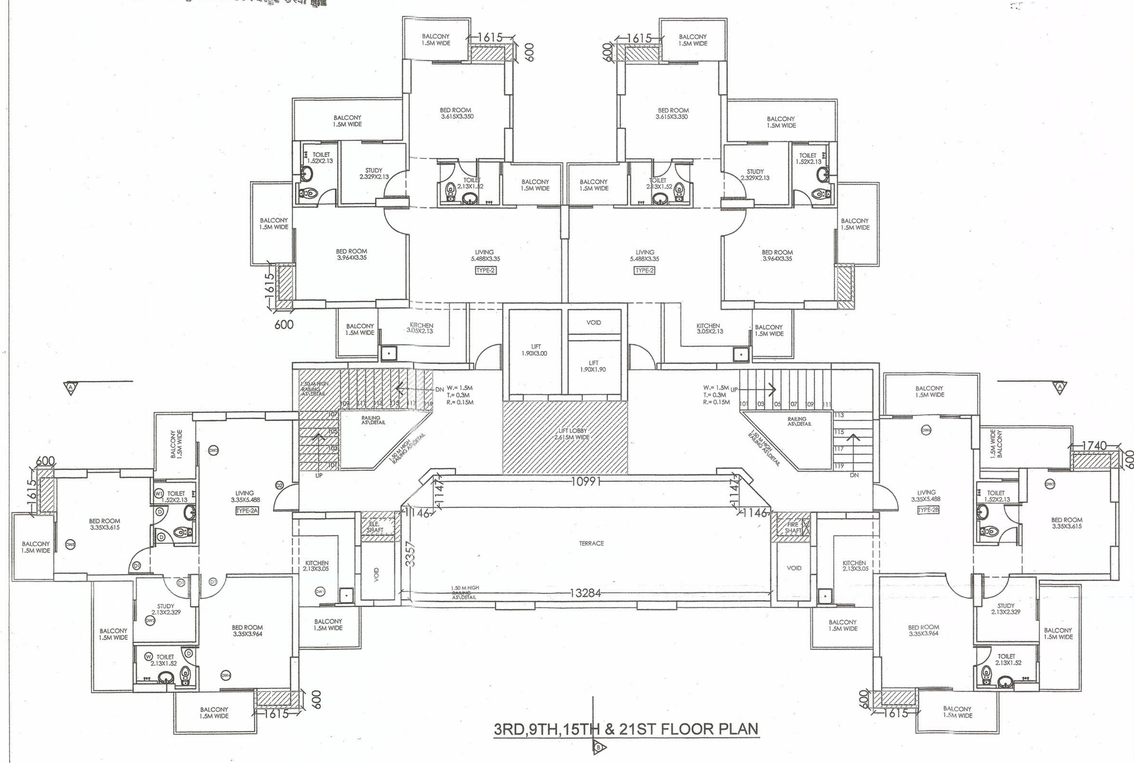

3RD,9TH,15TH & 21ST FLOOR PLAN

F.A.R. AREA:-

COVERED AREA DETAIL ON GROUND FLOOR :-

=(TYPE-2X2)+(TYPE-2A)+(CIRCUL. AREA AT ONE FLOOR)+(LIFT WELL)+(BEAM):-

=(74.767X2)+(72.78)+(53.779)+(9.31)+(1.717)

=(149.534)+(72.78)+(53.779)+(9.31)+(1.717)

= **287.12 SQ.M.**

COVERED AREA DETAIL ON FIRST FLOOR :-

=(TYPE-2x2)+(TYPE-2AX2)+(TYPE-2B)+(CIRCULATION AREA AT ONE FLOOR)+(BEAM)

=(74.767X2)+(72.774)+(72.78)+(53.779)+(4.112)+(1.717)

=(149.534)+(72.774)+(72.78)+(53.779)+(4.112)+(1.717)

= **354.696 SQ.M.**

COVERED AREA DETAIL AT ONE FLOOR (2ND TO 25TH):-

=(TYPE-2x2)+(TYPE-2AX2)+(TYPE-2B)+(CIRCULATION AREA AT ONE FLOOR)+(BEAM)

=(74.767X2)+(72.774)+(72.78)+(53.779)+(4.112)

=(149.534)+(72.774)+(72.78)+(53.779)+(4.112)

= **352.979 SQ.M.**

GROUND COVERAGE FOR ONE BLOCK :-

=(TYPE-2X2)+(TYPE-2A)+(TYPE-2B)+(CIRCUL. AREA AT ONE FLOOR)+(LIFT WELL)

+FIRE STAIRCASE +(LIFT LOBBY)+ CUPBOARD(2X2+2A+2B)+SER. SHAFT+

REFUGE AREA+(BEAMS):-

=(74.767X2)+(72.774)+(72.78)+(53.779)+(9.538)+(12.933)+(11.741)

+[(1.938X2)+(1.938)+(1.938)]+(3.031)+(4.112)+(1.717)

=(149.534)+(72.774)+(72.78)+(53.779)+(9.538)+(12.933)+(11.741)+(7.752)+(4.112)

= **394.943 SQ.M.**

COVERED AREA OF STILITS :-

=(TYPE-2B)= **72.774 SQ.M.**

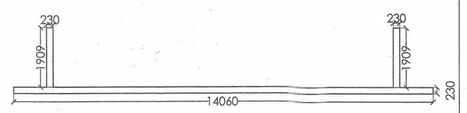

AREA DETAIL OF BEAM :-

= (14.06X0.23)+(0.23X1.909X2) = **4.112 SQ.M.**

15% EXTRA F.A.R AREA CALCULATION FOR BLOCK A&B:-

AREA DETAIL OF FIRESCAPE STAIRCASE:-

= (0.397)+(4.916)+(4.47)+(3.15)

= **12.933 SQ.M.**

AREA DETAIL OF MUMTY:-

= ((1.73X5.29)+(4.88X1.73))X2 = **35.188 SQ.M.**

AREA DETAIL OF MACHINE ROOM:-

= (2.36X1.22)+(4.49X4.855) = **24.678 SQ.M.**

AREA DETAIL OF WATER TANK:-

= ((1.73X5.29)+(4.88X1.73))X2 = **35.188 SQ.M.**

CUPBOARD AREA DETAIL FOR ONE UNIT TYPE-2

(1.615X0.6X2) = **1.938 SQ.M.**

CUPBOARD AREA DETAIL FOR ONE UNIT TYPE-2A

(1.615X0.6X2) = **1.938 SQ.M.**

CUPBOARD AREA DETAIL FOR ONE UNIT TYPE-2B

(1.615X0.6X2) = **1.938 SQ.M.**

DETAIL OF LIFT WELL AREA:-

(1.90X3.00)+(1.90X1.90) = **9.31 SQ.M.**

DETAIL OF LIFT LOBBY AREA:-

= 4.49 X 2.615 = **11.741 SQ.M.**

AREA DETAIL OF SER. SHAFT:-

= (1.43X1.06)X2 = **3.031 SQ.M.**

AREA DETAIL OF REFUGE AREA:-

=(13.284X3.357)+(0.5X1.146X1.147X2)+(10.991X1.147)

= **58.513 SQ.M.**

15% EXTRA FAR AREA DETAIL ON GROUND FLOOR :-

= FIRESCAPE +CUPBOARD(2X2+2A)+ LIFTLOBBY+SER. SHAFT+TOILET :-

= 12.933 + (1.938X2)+(1.938)+11.741+3.031+8.931 = **42.45 SQ.M.**

15% EXTRA FAR AREA DETAIL ON ONE FLOOR (1ST TO 25TH) :-

= FIRESCAPE + CUPBOARD(2X2+2A+2B)+LIFTLOBBY+SER. SHAFT :-

= 12.933 + (1.938X2)+(1.938)+(1.938)+11.741+3.031 = **35.457 SQ.M.**

15% EXTRA FAR AREA DETAIL ON ALL FLOOR OF BLOCK-A&B :-

= GROUND FLOOR + 1ST TO 25TH FLOOR +MUMTY +MACHINE ROOM

+ WATER TANK+REFUGE AREA

= 42.45+(35.457X25)+35.188+24.678+35.188 +(58.513X4)

= **1257.981 SQ.M.**

SCHEDULE OF DOOR & WINDOWS

S.NO.	TYPE	SIZE	SILL HEIGHT	LTL LVL
1	D	0.75 X 2.10	~~FF 25C/T 2.10 M~~	
2	D-1	1.0 X 2.10	-	2.10
3	DW	1.105 X 2.45	-	2.45
4	DW-1	1.450 X 2.45	-	2.45
5	DW-2	1.55 X 2.45	-	2.45 ,,
6	DW-3	1.65 X 2.45	-	2.45
7	DW-4	3.092 X 2.45	-	2.45 ,,
8	DW-5	1.87 X 2.45	-	2.45 ,,
9	DW-6	1.357 X 2.45	-	2.45 ,,
10	W	0.75 X 1.40	1.05	2.45 ,,
11	W-1	0.95 X 1.20	0.75	2.45 ,,

Map for proposed Building is as per Bye laws. Submitted for approval please.

Architect

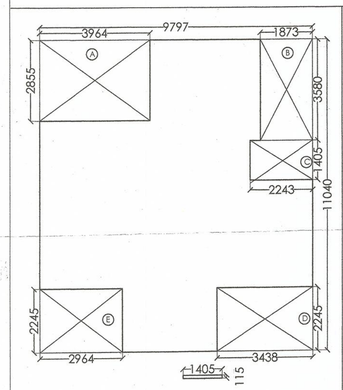

COVERED AREA DETAIL OF ONE UNIT **TYPE-2B**

=(9.797X11.04)+(1.405X0.115)-[(A)+(B)+(C)+(D)+(E)]

=(108.158)+(0.161) - A(3.964X2.855)+B(1.873X3.58)

+C(2.243X1.405)+D(3.438X2.245)+E(2.964X2.245)

=(108.319) - A(11.317)+B(6.705)+C(3.151)+D(7.718)+E(6.654)

=(108.319) - (35.545) = **72.774 SQ.M.**

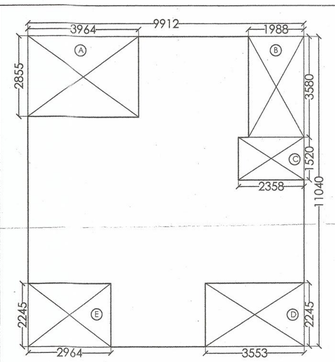

COVERED AREA DETAIL OF ONE UNIT **TYPE-2A**

=(9.912X11.04)-[(A)+(B)+(C)+(D)+(E)]

=(109.428) - A(3.964X2.855)+B(1.988X3.58)+C(2.358X1.52)

+D(3.553X2.245)+E(2.964X2.245)

=(109.428) - A(11.317)+B(7.117)+C(3.584)+D(7.976)+E(6.654)

=(109.428) - (36.648) = **72.78 SQ.M.**

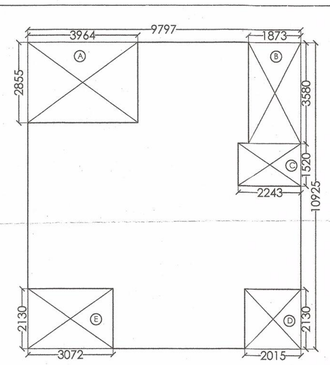

COVERED AREA DETAIL OF ONE UNIT **TYPE-2**

=(9.797X10.925)-[(A)+(B)+(C)+(D)+(E)]

=(107.032) - A(3.964X2.855)+B(1.873X3.58)+C(2.243X1.52)

+D(2.015X2.13)+E(3.072X2.13)

=(107.032) - A(11.317)+B(6.705)+C(3.409)+D(4.291)+E(6.543)

=(107.032) - (32.265) = **74.767 SQ.M.**

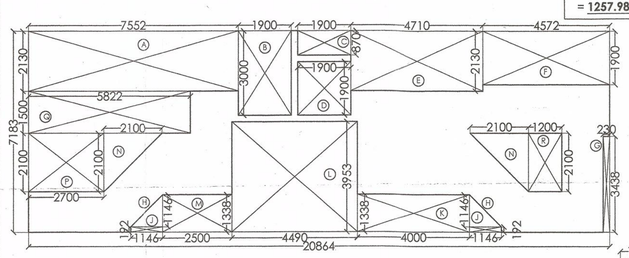

COVERED AREA FOR CIRCULATION AT ONE FLOOR:-

=(20.864X7.183)-[(A)+(B)+(C)+(D)+(E)+(F)+(G)+(HX2)+(JX2)+(K)

+(L)+(M)+(NX2)+(P)+(Q)+(R)]

=(149.866) - A(7.552X2.13)+B(1.90X3.0)+C(1.90X0.87)+D(1.90X1.90)

+E(4.71X2.13)+F(4.572X1.90)+G(0.23X3.438)+H(0.5X1.146X1.146X2)

+J(1.146X0.192X2)+K(4.0X1.338)+L(4.49X3.953)+M(2.50X1.338)

+N(0.5X2.10X2.10X2)+P(2.10X2.70)+Q(5.822X1.50)+R(1.20X2.10)

=(149.866) - A(16.085)+B(5.7)+C(1.653)+D(3.61)+E(10.032)+F(8.686)

+G(0.79)+H(1.313)+J(0.44)+K(5.352)+L(17.748)+M(3.345)+N(4.41)

+P(5.67)+Q(8.733)+(2.52)

=(149.866) - (96.087) = **53.779 SQ.M.**

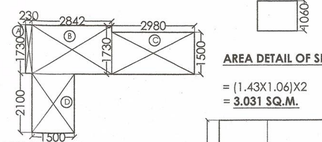

AREA DETAIL OF FIRESCAPE STAIRCASE :-

= (A)+(B)+(C)+(D)

= A(0.23X1.73)+B(2.842X1.73)

+C(2.98X1.5)+D(1.50X2.10)

= A(0.397)+B(4.916)+C(4.47)+D(3.15)

= **12.933 SQ.M.**

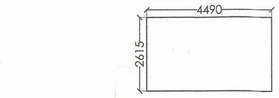

AREA DETAIL OF LIFT LOBBY :-

= 4.49 X 2.615 = **11.741 SQ.M.**

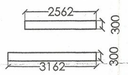

AREA DETAIL OF BEAM ON GROUND AND FIRST FLOOR :-

= (3.162X0.30)+(2.562X0.30) = **1.717 SQ.M.**

AREA DETAIL OF SER. SHAFT:-

= (1.43X1.06)X2

= **3.031 SQ.M.**

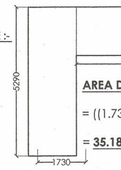

AREA DETAIL OF MUMTY :-

= ((1.73X5.29)+(4.88X1.73))X2

= **35.188 SQ.M.**

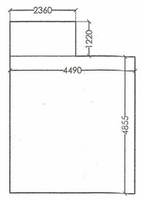

AREA DETAIL OF MACHINE ROOM :-

= (2.36X1.22)+(4.49X4.855)

= **24.678 SQ.M.**

SIGNING AUTHORITY

For Apex Dream Homes Pvt. Ltd.

Director Director

ARCHITECT'S SIGN

PANKAJ NATH ANDLEY
B.ARCH A.I.I.A.
ARCHITECT CA/91/24868

SUBMISSION DRAWING

PROJECT:-

GROUP HOUSING FOR
APEX DREAM HOMES PVT. LTD.
PLOT NO.-12A,SECTOR-75
AT NOIDA. (U.P.)

DRG. TITLE:-
3rd, 9th, 15th & 21st
FLOOR PLAN (BLOCK-A&B)

SCALE:-1:100	DRG. NO.:07
DLT.BY.:-	DATE:-27/07/2015

ARCHITECTS:-

P. N. ANDLEY B.ARCH. A.I.I.A.

ANDLEYS ASSOCIATES PVT. LTD.
ARCHITECTS ENGINEERS PLANNERS
39 HOUSING SOCIETY N.D.S.E.-I NEW DELHI - 110049