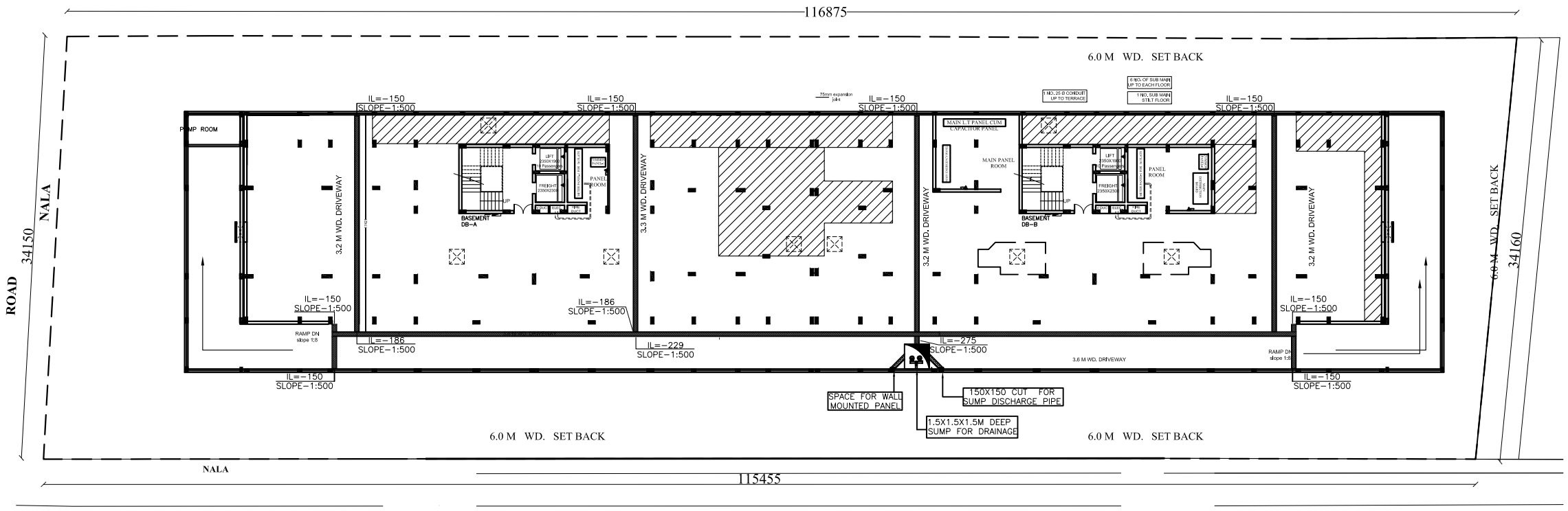

BASEMENT DRAINAGE PLAN

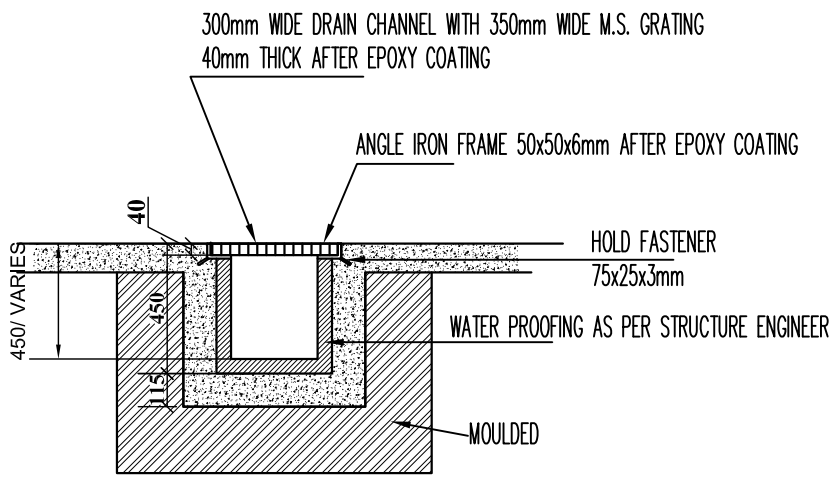

SCALE (N.T.S.)

SECTIONAL DETAIL FOR BASEMENT PARKING & RAMP DRAIN CHANNEL WITH GRATING

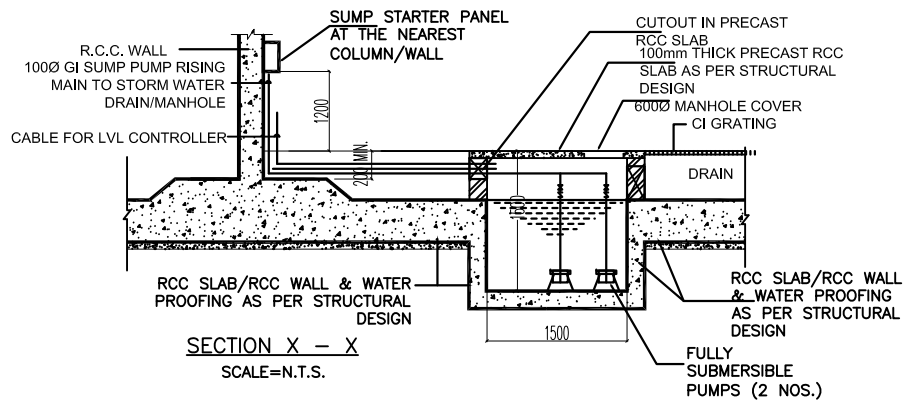

SECTION X – X

SCALE=N.T.S.

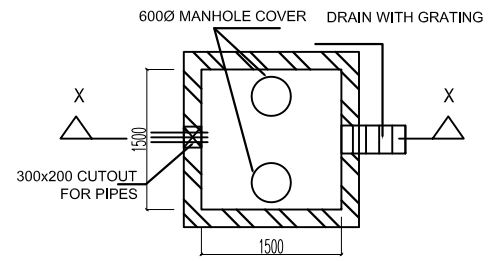

PLAN OF DRAINAGE SUMP

SCALE=N.T.S.

PROPOSED GROUP HOUSING - MAGHA APARTMENTS AT PLOT NO. C1,SECTOR O, MANSAROVAR YOJNA, KANPUR ROAD ,LDA, LUCKNOW

BUILDING MEP CONSULTANT
TRIVENI CONSULTING ENGINEERS
FLAT NO.–D, GF, AVON RESIDENCY
A1/8, SEC–H,ALIGANJ,
LUCKNOW
EMAIL:triveniconsultants.lko@gmail.com
PH:5224108651, 09794991199

OWNER | ARCHITECT | ORIENTATION

ira-sumit namit
m u r a l a g e
architects , interior decorators & muralists
A-3/269 , vibhav khand , gomti nagar , lucknow
phone no.. : 2980139, 2320715

Sheet No - 14
Ref No - L-79(AF-979(1))
Date - DEC'16
Drawn By-MOHIT JAISWAL

SERVICES DRAWING
BASEMENT DRAINAGE
SCALE - 1:200