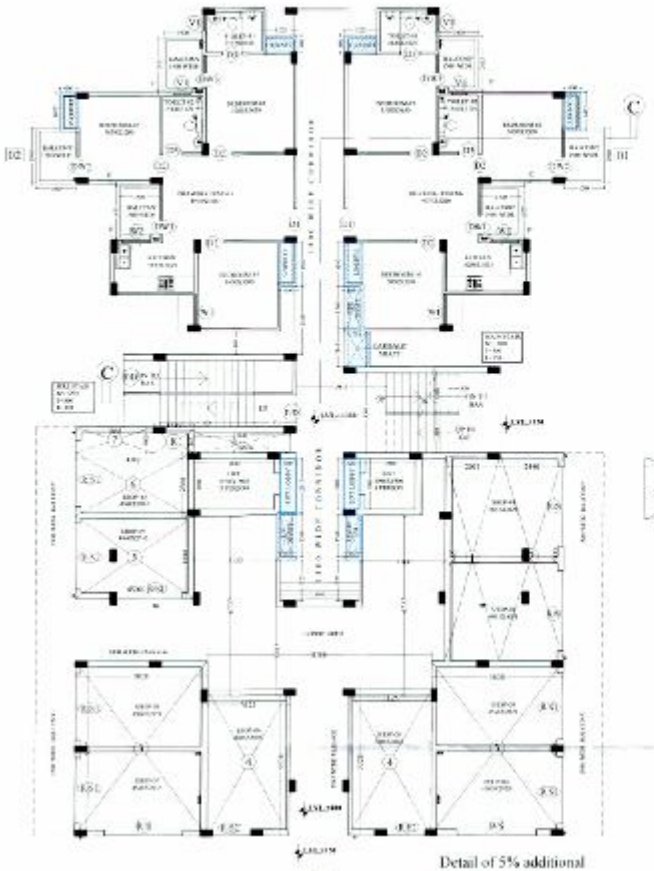

ELEVATION –C

## GROUND FLOOR PLAN
( TOWER -C )

### SCHEDULE OF DOOR'S & WINDOWS

| TYPE | SIZE | SILL | LINTEL |
|---|---|---|---|
| D1 | 1050 X 2400 | — | 2400 |
| D2 | 900 X 2400 | — | 2400 |
| D3 | 750 x 2400 | — | 2400 |
| W1 | 1146.25 x 1600 | 900 | 2500 |
| W2 | 1661 x 1456 | 1050 | 2500 |
| W3 | 2075 x 1450 | 1050 | 2500 |
| D/W1 | (750+1325)x2500 | 100 D/WIDOW AREA | 2500 |
| D/W2 | (750+950)x2500 | 100 D/WIDOW AREA | 2500 |
| D/W3 | (900+1450)x2500 | 100 D/WIDOW AREA | 2500 |
| VT | 600 x 1300 | 1200 | 2500 |
| FD | 1200 x 2500 | --- | 2500 |

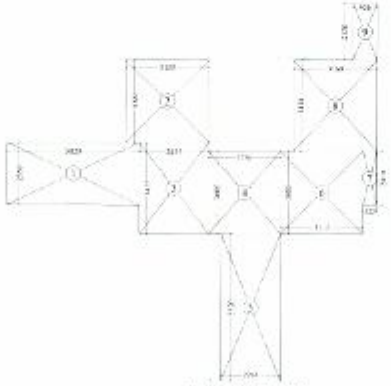

LOBBY AREA DETAIL

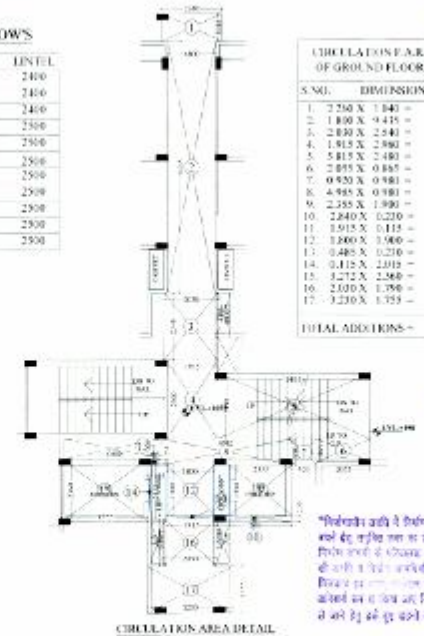

CIRCULATION AREA DETAIL

"निर्माणकर्ता उक्ति ने नियम संख्या xx सूत्र व अन्य सेट मानचित्र तथा मानचित्र किया जाए नियम कर्मी के परिपालन हो अपने उपयोग की जाती व नियम कर्मचारी का कार्य का विवरण [illegible] नियम का उपयोग आवेदक अथवा व उनके अन्य नियम कर्मचारी को से अपने हेतु अर्थ सुए करने के प्रयोग किया जाए"

### CIRCULATION F.A.R AREA DETAIL OF GROUND FLOOR (TOWER-C)

| S.NO. | DIMENSION | AREA |
|---|---|---|
| 1. | 2.750 X 1.840 = | 2.750 SQ.M |
| 2. | 1.800 X 9.415 = | 16.581 SQ.M |
| 3. | 2.030 X 2.540 = | 5.156 SQ.M |
| 4. | 1.915 X 2.980 = | 5.708 SQ.M |
| 5. | 5.815 X 2.480 = | 14.42[illegible] SQ.M |
| 6. | 2.055 X 0.865 = | 1.779 SQ.M |
| 7. | 0.950 X 0.980 = | 0.987 SQ.M |
| 8. | 4.985 X 0.980 = | 4.885 SQ.M |
| 9. | 2.355 X 1.900 = | 4.474 SQ.M |
| 10. | 2.840 X 0.220 = | 0.653 SQ.M |
| 11. | 3.915 X 0.115 = | 0.220 SQ.M |
| 12. | 1.800 X 1.900 = | 3.420 SQ.M |
| 13. | 0.480 X 0.210 = | 0.1[illegible] SQ.M |
| 14. | 0.115 X 2.010 = | 0.232 SQ.M |
| 15. | 3.272 X 2.360 = | 7.72[illegible] SQ.M |
| 16. | 2.100 X 1.750 = | 3.674 SQ.M |
| 17. | 3.230 X 1.755 = | 5.669 SQ.M |
| | TOTAL ADDITIONS = | [illegible] |

"[illegible] के अनुसार सुविधा पूर्ण [illegible] के नियम [illegible] किया जाए"

UNIT NO.01
NOTE -01 To 02 ARE SAME
PROP. ON 1ST. FLOOR
F.A.R. AREA DETAIL OF UNIT NO. - 01

| S.NO | DIMENSION | AREA |
|---|---|---|
| 1. | 2.355 X 1.640 = | 3.862 SQ.M |
| 2. | 3.580 X 1.525 = | 5.459 SQ.M |
| 3. | 3.165 X 3.420 = | 10.825 SQ.M |
| 4. | 5.205 X 5.670 = | 29.512 SQ.M |
| 5. | 1.840 X 2.065 = | 3.801 SQ.M |
| 6. | 4.805 X 1.940 = | 8.933 SQ.M |
| 7. | 3.280 X 1.375 = | 4.51 SQ.M |
| | TOTAL = | 66.912 SQ.M |

### F.A.R.AREA DETAILS OF GROUND FLOOR

| Description | UNIT AREA | Nos. | Total Area(Sq. M.) |
|---|---|---|---|
| UNIT NO. -01 To 04 ARE SAME | 66.912 | 2 | 133.824 |
| | | | |
| CIRCULATION AREA OF TYPICAL FLOOR | | 1 | 78.279 |
| TOTAL F.A.R. AREA OF GROUND FLOOR | | | 212.103 |

### COMMERCIAL LOBBY F.A.R. AREA AT GROUND FLOOR (TOWER-C)

| S.NO | DIMENSION | AREA |
|---|---|---|
| 1. | 5.020 X 2.355 | = 11.797 SQ.M |
| 2. | 3.165 X 3.05 | = 9.749 SQ.M |
| 3. | 2.635 X 3.420 | = 9.005 SQ.M |
| 4. | 2.750 X 3.085 | = 8.484 SQ.M |
| 5. | 2.265 X 5.520 | = 12.503 SQ.M |
| 6. | 3.115 X 3.085 | = 9.610 SQ.M |
| 7. | 0.525 X 2.010 | = 1.055 SQ.M |
| 8. | 3.140 X 3.430 | = 10.769 SQ.M |
| 9. | 0.900 X 2.1 | = 1.890 SQ.M |
| | TOTAL ADDITIONS = | 75.022 SQ.M |

### COMMERCIAL F.A.R. AREA DETAIL AT GROUND FLOOR (TOWER-C)

| S.NO | DIMENSION | AREA |
|---|---|---|
| 1. | 2.855 X 2.585 = | 15.700 SQ.M |
| 2. | 2.440 X 2.591 = | 15.052 SQ.M |
| 3. | 3.025 X 6.595 X 2 = | 66.214 SQ.M |
| 4. | 3.325 X 5.525 X 2 = | 34.508 SQ.M |
| 5. | 2.500 X 3.080 = | 10.905 SQ.M |
| 6. | 3.787 X 2.761 = | 10.747 SQ.M |
| 7. | 2.965 X 0.980 = | 2.906 SQ.M |
| 8. | 1.591 X 0.865 = | 1.375 SQ.M |
| TOTAL ADDITIONS = | | 164.015 SQ.M |

TOTAL COMMERCIAL AREA = (GROUND FLOOR LOBBY + COMMERCIAL)
TOTAL COMMERCIAL AREA = (FIRST FLOOR + GROUND FLOOR)
TOTAL F.A.R. AREA = [illegible] SQ.M

### Detail of 5% additional F.A.R. Area (Facility)

FACILITY AREA DETAIL OF LIFT LOBBY 1st. FLOOR

| S.NO | DIMENSION | AREA |
|---|---|---|
| 1 | [illegible] = | [illegible] SQM |
| 2 | [illegible] = | [illegible] SQM |
| | TOTAL = | [illegible] SQM |

FACILITY AREA DETAIL OF SHAFTS ON 1ST FLOOR

| S.NO | DIMENSION | AREA |
|---|---|---|
| 1 | [illegible] = | [illegible] SQM |
| 2 | [illegible] = | [illegible] SQM |
| 3 | [illegible] = | [illegible] SQM |
| 4 | [illegible] = | [illegible] SQM |
| | TOTAL = | [illegible] SQM |

FACILITY AREA DETAIL OF CUPBOARD 1ST FLOOR

| S.NO | DIMENSION | AREA |
|---|---|---|
| 1 | [illegible] = | [illegible] SQM |
| 2 | [illegible] = | [illegible] SQM |
| 3 | [illegible] = | [illegible] SQM |
| | TOTAL = | [illegible] SQM |

FACILITY AREA TOTAL
= LIFT LOBBY - SHAFTS - CUPBOARD
=2.249+4.00 + 5.084 = 11.236 SQ.M

### NON FAR AREA DETAIL

NON FAR AREA DETAIL OF FIRE STAIR

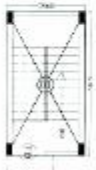

| S.NO | DIMENSION | AREA |
|---|---|---|
| | [illegible] = | [illegible] SQM |
| | TOTAL = | [illegible] SQM |

### TOWER-C

A. AREA STATEMENT (PROPOSED IN METER SQUARE)

| S. NO. | PARTICULARS | AREA (NOT FAR) 1 | AREA (FAR) 2 | | UNITS 3 | UNITS (DIMENSION) 4 | FACILITY (FAR) 5 |
|---|---|---|---|---|---|---|---|
| | | CIRCULATION | COMMERCIAL | RESIDENTIAL | | | |
| | BASEMENT FLOOR (PROPOSED) | | | | | Ext. - 2850 | |
| | GROUND FLOOR (PROPOSED) | 15.998 | 239.057 | 212.103 | 2 | Ext. - 1350 | [illegible] |
| | 1st FLOOR (PROPOSED) | 15.998 | — | 226.402 | 4 | Ext. - 4350 | [illegible] |
| | 2nd FLOOR (PROPOSED) | 15.998 | — | 226.402 | 4 | Ext. - 7350 | [illegible] |
| | 3rd FLOOR (PROPOSED) | 15.998 | — | 226.402 | 4 | Ext. - 10350 | [illegible] |
| | 4th FLOOR (PROPOSED) | 15.998 | — | 226.402 | 4 | Ext. - 13350 | [illegible] |
| | 5th FLOOR (PROPOSED) | 15.998 | — | 226.402 | 4 | Ext. - 16350 | [illegible] |
| | 6th FLOOR (PROPOSED) | 15.998 | — | 226.402 | 4 | Ext. - 19350 | [illegible] |
| | 7th FLOOR (PROPOSED) | 15.998 | — | 226.402 | 4 | Ext. - 22350 | [illegible] |
| | 8th FLOOR (PROPOSED) | 15.998 | — | 226.402 | 4 | Ext. - 25350 | [illegible] |
| | 9th FLOOR (PROPOSED) | 15.998 | — | 226.402 | 4 | Ext. - 28350 | [illegible] |
| | 10th FLOOR (PROPOSED) | 15.998 | — | 226.402 | 4 | Ext. - 31350 | [illegible] |
| | 11th FLOOR (PROPOSED) | 15.998 | — | 226.402 | 4 | Ext. - 34350 | [illegible] |
| | 12th FLOOR (PROPOSED) | 15.998 | — | 226.402 | 4 | Ext. - 37350 | [illegible] |
| | 13th FLOOR (PROPOSED) | 15.998 | — | 226.402 | 4 | Ext. - 40350 | [illegible] |
| | TERRACE (PROPOSED) | — | — | — | | Ext. - 43350 | |
| | MACHINE & MUMTY HALL HEAD ROOM (PROPOSED) | — | — | | | Ext. - 46250 | [illegible] |
| | FIRE STAIR MUMTY (PROPOSED) | 15.998 | — | | | | |
| | WATER TANKS | — | — | | | | |
| | TOTAL | 239.970 | 239.057 | 4515.784 | 54 | | [illegible] |

GROUND COVERAGE OF TOWER-C
=TOTAL SELT AREA OF TOWER-C
=478.724 SQ.MT.

LEGEND

FACILITY AREA

PROJECT :-

PROPOSED GROUP HOUSING
(MEHAK JEEVAN) AT KHASRA NOS. 1091 (PART), 1092 (PART) IN VILLAGE MORTA, PARGANA JALALABAD GHAZIABAD U.P.

OWNER :-

1) MEHAK INFRASTRUCTURE PVT. LTD
2) MEHAK INFRATECH PVT. LTD
3) ALOK VIHAR SAHAKARI AWAS SAMITI LTD.

DRAWING TITLE :-

( TOWER -C)
GROUND FLOOR PLAN

DRAWN BY :-
CEMS ENGINEERS & CONSULTANTS PVT. LTD.
Head Office : [illegible]
Site Office : [illegible]
Tel. : [illegible]
E-mail : [illegible]

OWNERS SIGN

For Mehak Infrastructure Pvt. Ltd.
Director

ARCHITECT'S SIGN

| DRAWN BY :- | CHECKED BY :- | SCALE | SHEET NO. |
|---|---|---|---|
| [illegible] | Ar. Manish Sharma | [illegible] | |