	CATCH BASIN (450 x 450) MM WITH PERFORATED MANHOLE COVER
	CATCH BASIN (600 x 600) MM WITH PERFORATED MANHOLE COVER
	STORM WATER MANHOLE (900 x 600) MM WITH PERFORATED MANHOLE COVER.
	SEWER MANHOLE (600 x 600) MM
	SEWER MANHOLE (900 x 600) MM
	GULLY TRAP (300 x 300) MM
	150Ø SW INTERNAL SEWER LINE, S=1:100
	EXTERNAL SW SEWER LINE (DIA AS / DESIGN CHART)
	EXTERNAL RCC STORM WATER LINE (DIA AS / DESIGN CHART)
	150Ø DI MUNICIPAL WATER SUPPLY LINE
	GI DOMESTIC WATER SUPPLY LINE FOR TOWERS (DIA MENTION IN LAYOUT)
	GI FLUSHING WATER SUPPLY LINE FOR TOWER (DIA MENTION IN LAYOUT)
	TUBE WALL WATER SUPPLY LINE
	HDPE GARDEN IRRIGATION WATER SUPPLY LINE (DIA IN LAYOUT)
	EXTERNAL MS FIRE HYDRANT LINE (DIA MENTION IN LAYOUT)
GH	GARDEN HYDRANT WITH CHAMBER (300x300) MM
EFH	EXTERNAL FIRE HYDRANT (750 x 500 x 250) MM
R.P.	RECHARGE PIT, 3000 MM DIA
D.C.	DESILTING CHAMBER (1000 x 2000)MM
S	4 WAY FIRE BRIGADE INLET CONNECTION FOR FIRE TANK PIPE DIA 150Ø
T	2 WAY FIRE BRIGADE WITHDRAWL CONNECTION FROM FIRE TANK, PIPE DIA 150Ø

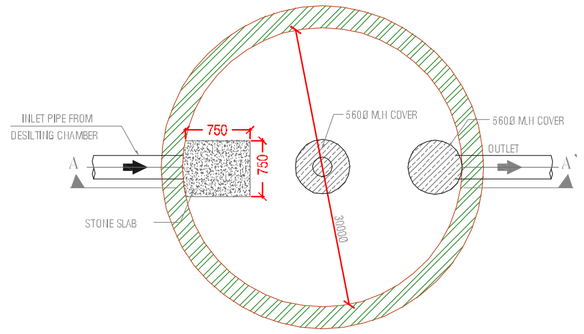

PLAN OF RECHARGE PIT

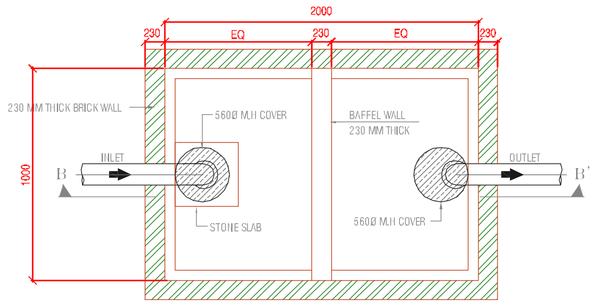

PLAN OF DESILTING CHAMBER

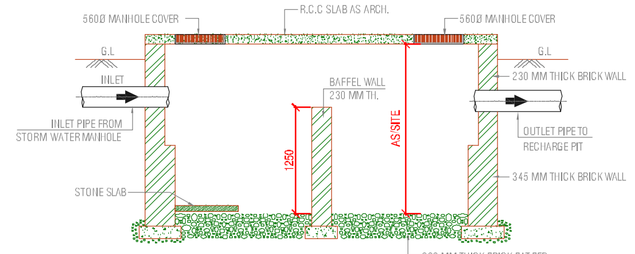

SECTION-B-B'

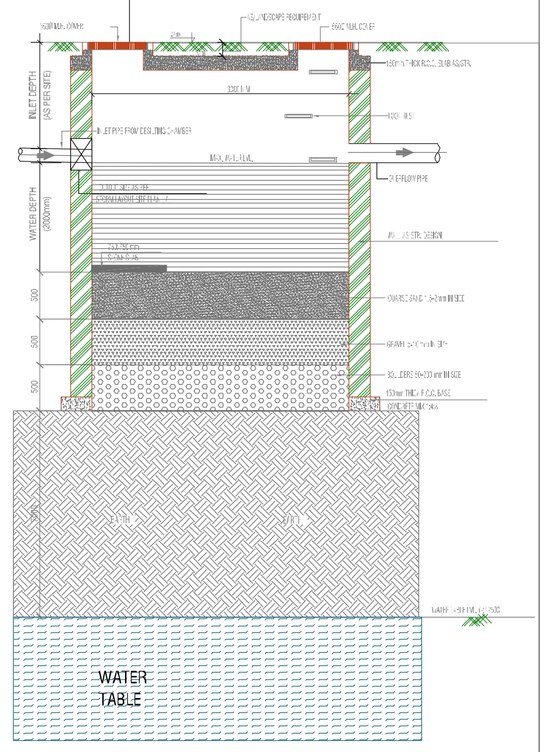

DISPERSION TRENCH DETAIL

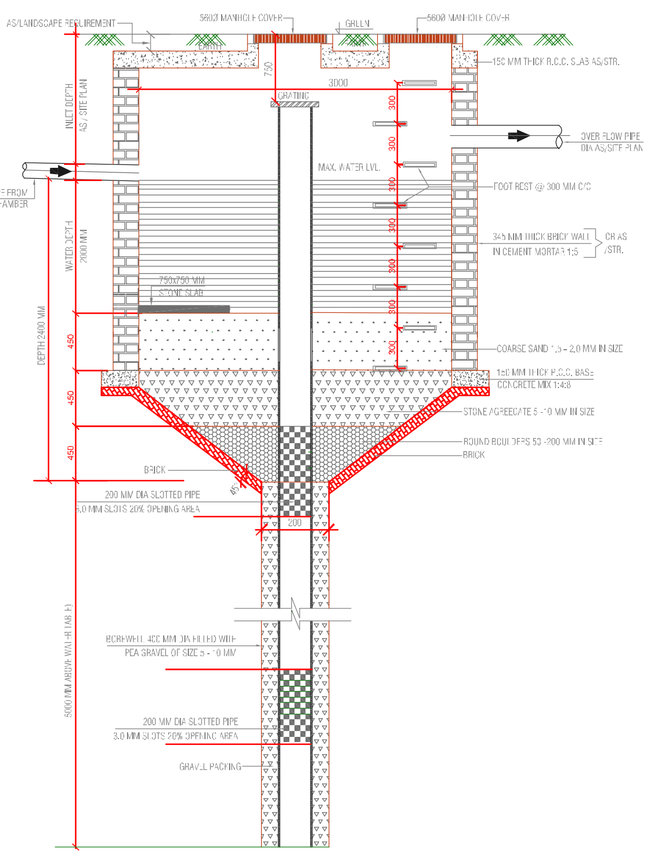

SECTION-A-A'

RECHARGE PIT DETAIL

SUBMISSION DRAWING

SHEET TITLE

SITE PLAN STORM LAYOUT

PROJECT

PROPOSED GROUP HOUSING PROJECT "HAPPY TRAILS" AT PLOT NO - GH-02A, SECTOR 10, GREATER NOIDA DISTT : GAUTAM BUDDH NAGAR

OWNER

M/S SHRIDHARA INFRATECH PVT. LTD.
711/92 DEEPALI NEHRU PLACE, NEW DELHI, 110019

ARCHITECT'S SIGNATURE

MEP CONSULTANT

PARADISE CONSULTANTS
PLOT NO. 96, BASEMENT, NEAR LIVING STYLE MALL, JASOLA VIHAR NEW DELHI - 110025
LANDLINE +91-11-29943801,26943216
E-mail: paradiseconsultants@gmail.com

SIGN & STAMP

AUTHORISED SIGNATORY

SCALE - 1:400 ON A1

DWG NO. SD-03

NORTH