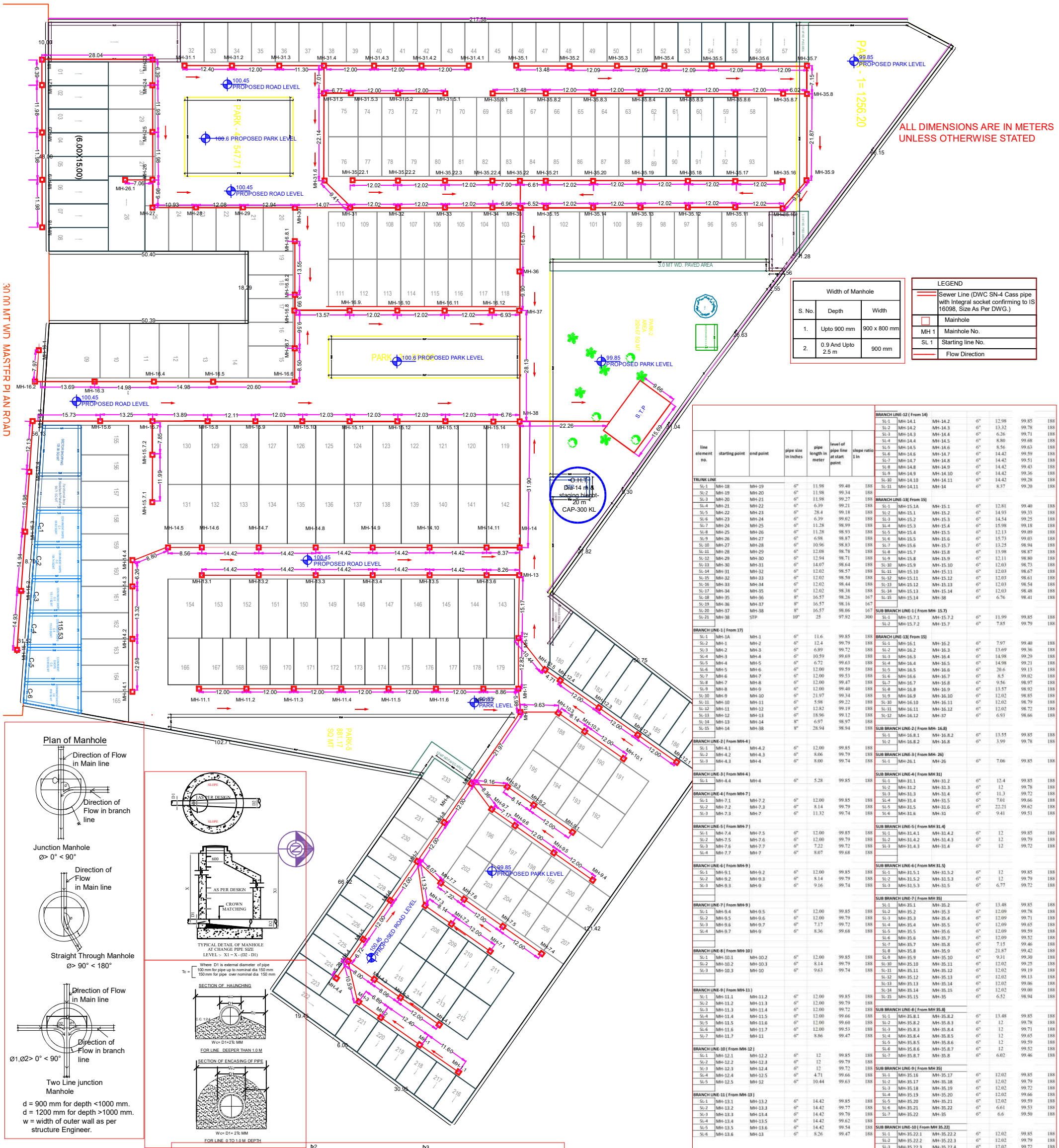

Width of Manhole		
S. No.	Depth	Width
1.	Upto 900 mm	900 x 800 mm
2.	0.9 And Upto 2.5 m	900 mm

LEGEND	
	Sewer Line (DWC SN-4 Cass pipe with Integral socket confirming to IS 16098, Size As Per DWG.)
	Mainhole
MH 1	Mainhole No.
SL 1	Starting line No.
	Flow Direction

line element no.	starting point	end point	pipe size in inches	pipe length in meter	level of pipe line at start point	slope ratio 1 in
TRUNK LINE						
SL-1	MH-18	MH-19	6"	11.98	99.40	188
SL-2	MH-19	MH-20	6"	11.98	99.34	188
SL-3	MH-20	MH-21	6"	11.98	99.27	188
SL-4	MH-21	MH-22	6"	6.39	99.21	188
SL-5	MH-22	MH-23	6"	28.4	99.18	188
SL-6	MH-23	MH-24	6"	6.39	99.02	188
SL-7	MH-24	MH-25	6"	11.28	98.99	188
SL-8	MH-25	MH-26	6"	11.28	98.93	188
SL-9	MH-26	MH-27	6"	6.98	98.87	188
SL-10	MH-27	MH-28	6"	10.96	98.83	188
SL-11	MH-28	MH-29	6"	12.08	98.78	188
SL-12	MH-29	MH-30	6"	12.94	98.71	188
SL-13	MH-30	MH-31	6"	14.07	98.64	188
SL-14	MH-31	MH-32	6"	12.02	98.57	188
SL-15	MH-32	MH-33	6"	12.02	98.50	188
SL-16	MH-33	MH-34	6"	12.02	98.44	188
SL-17	MH-34	MH-35	6"	12.02	98.38	188
SL-18	MH-35	MH-36	8"	16.57	98.26	167
SL-19	MH-36	MH-37	8"	16.57	98.16	167
SL-20	MH-37	MH-38	8"	16.57	98.06	167
SL-21	MH-38	STP	10"	25	97.92	300
BRANCH LINE-1 (From 17)						
SL-1	MH-1A	MH-1	6"	11.6	99.85	188
SL-2	MH-1	MH-2	6"	12.4	99.79	188
SL-3	MH-2	MH-3	6"	6.89	99.72	188
SL-4	MH-3	MH-4	6"	10.59	99.69	188
SL-5	MH-4	MH-5	6"	6.72	99.63	188
SL-6	MH-5	MH-6	6"	12.00	99.59	188
SL-7	MH-6	MH-7	6"	12.00	99.53	188
SL-8	MH-7	MH-8	6"	12.00	99.47	188
SL-9	MH-8	MH-9	6"	12.00	99.40	188
SL-10	MH-9	MH-10	6"	21.97	99.34	188
SL-11	MH-10	MH-11	6"	5.98	99.22	188
SL-12	MH-11	MH-12	6"	12.82	99.19	188
SL-13	MH-12	MH-13	6"	18.96	99.12	188
SL-14	MH-13	MH-14	8"	6.97	98.97	188
SL-15	MH-14	MH-38	8"	28.94	98.94	188
BRANCH LINE-2 (From MH-4)						
SL-1	MH-4.1	MH-4.2	6"	12.00	99.85	188
SL-2	MH-4.2	MH-4.3	6"	8.06	99.79	188
SL-3	MH-4.3	MH-4	6"	8.00	99.74	188
BRANCH LINE-3 (From MH-4)						
SL-1	MH-4.4	MH-4	6"	5.28	99.85	188
BRANCH LINE-4 (From MH-7)						
SL-1	MH-7.1	MH-7.2	6"	12.00	99.85	188
SL-2	MH-7.2	MH-7.3	6"	8.14	99.79	188
SL-3	MH-7.3	MH-7	6"	11.32	99.74	188
BRANCH LINE-5 (From MH-7)						
SL-1	MH-7.4	MH-7.5	6"	12.00	99.85	188
SL-2	MH-7.5	MH-7.6	6"	12.00	99.79	188
SL-3	MH-7.6	MH-7.7	6"	7.22	99.72	188
SL-4	MH-7.7	MH-7	6"	8.07	99.68	188
BRANCH LINE-6 (From MH-9)						
SL-1	MH-9.1	MH-9.2	6"	12.00	99.85	188
SL-2	MH-9.2	MH-9.3	6"	8.14	99.79	188
SL-3	MH-9.3	MH-9	6"	9.16	99.74	188
BRANCH LINE-7 (From MH-9)						
SL-1	MH-9.4	MH-9.5	6"	12.00	99.85	188
SL-2	MH-9.5	MH-9.6	6"	12.00	99.79	188
SL-3	MH-9.6	MH-9.7	6"	7.17	99.72	188
SL-4	MH-9.7	MH-9	6"	8.36	99.68	188
BRANCH LINE-8 (From MH-10)						
SL-1	MH-10.1	MH-10.2	6"	12.00	99.85	188
SL-2	MH-10.2	MH-10.3	6"	8.14	99.79	188
SL-3	MH-10.3	MH-10	6"	9.63	99.74	188
BRANCH LINE-9 (From MH-11)						
SL-1	MH-11.1	MH-11.2	6"	12.00	99.85	188
SL-2	MH-11.2	MH-11.3	6"	12.00	99.79	188
SL-3	MH-11.3	MH-11.4	6"	12.00	99.72	188
SL-4	MH-11.4	MH-11.5	6"	12.00	99.66	188
SL-5	MH-11.5	MH-11.6	6"	12.00	99.60	188
SL-6	MH-11.6	MH-11.7	6"	12.00	99.53	188
SL-7	MH-11.7	MH-11	6"	8.86	99.47	188
BRANCH LINE-10 (From MH-12)						
SL-1	MH-12.1	MH-12.2	6"	12	99.85	188
SL-2	MH-12.2	MH-12.3	6"	12	99.79	188
SL-3	MH-12.3	MH-12.4	6"	12	99.72	188
SL-4	MH-12.4	MH-12.5	6"	4.71	99.66	188
SL-5	MH-12.5	MH-12	6"	10.44	99.63	188
BRANCH LINE-11 (From MH-13)						
SL-1	MH-13.1	MH-13.2	6"	14.42	99.85	188
SL-2	MH-13.2	MH-13.3	6"	14.42	99.77	188
SL-3	MH-13.3	MH-13.4	6"	14.42	99.70	188
SL-4	MH-13.4	MH-13.5	6"	14.42	99.62	188
SL-5	MH-13.5	MH-13.6	6"	14.42	99.54	188
SL-6	MH-13.6	MH-13	6"	8.26	99.47	188
BRANCH LINE-12 (From 14)						
SL-1	MH-14.1	MH-14.2	6"	12.98	99.85	188
SL-2	MH-14.2	MH-14.3	6"	13.32	99.78	188
SL-3	MH-14.3	MH-14.4	6"	6.26	99.71	188
SL-4	MH-14.4	MH-14.5	6"	8.80	99.68	188
SL-5	MH-14.5	MH-14.6	6"	8.56	99.63	188
SL-6	MH-14.6	MH-14.7	6"	14.42	99.59	188
SL-7	MH-14.7	MH-14.8	6"	14.42	99.51	188
SL-8	MH-14.8	MH-14.9	6"	14.42	99.43	188
SL-9	MH-14.9	MH-14.10	6"	14.42	99.36	188
SL-10	MH-14.10	MH-14.11	6"	14.42	99.28	188
SL-11	MH-14.11	MH-14	6"	8.37	99.20	188
BRANCH LINE-13(From 15)						
SL-1	MH-15.1A	MH-15.1	6"	12.81	99.40	188
SL-2	MH-15.1	MH-15.2	6"	14.93	99.33	188
SL-3	MH-15.2	MH-15.3	6"	14.54	99.25	188
SL-4	MH-15.3	MH-15.4	6"	15.98	99.18	188
SL-5	MH-15.4	MH-15.5	6"	12.13	99.09	188
SL-6	MH-15.5	MH-15.6	6"	15.73	99.03	188
SL-7	MH-15.6	MH-15.7	6"	13.25	98.94	188
SL-8	MH-15.7	MH-15.8	6"	13.98	98.87	188
SL-9	MH-15.8	MH-15.9	6"	12.11	98.80	188
SL-10	MH-15.9	MH-15.10	6"	12.03	98.73	188
SL-11	MH-15.10	MH-15.11	6"	12.03	98.67	188
SL-12	MH-15.11	MH-15.12	6"	12.03	98.61	188
SL-13	MH-15.12	MH-15.13	6"	12.03	98.54	188
SL-14	MH-15.13	MH-15.14	6"	12.03	98.48	188
SL-15	MH-15.14	MH-38	6"	6.76	98.41	188
SUB BRANCH LINE-1 (From MH- 15.7)						
SL-1	MH-15.7.1	MH-15.7.2	6"	11.99	99.85	188
SL-2	MH-15.7.2	MH-15.7	6"	7.85	99.79	188
BRANCH LINE-13(From 15)						
SL-1	MH-16.1	MH-16.2	6"	7.97	99.40	188
SL-2	MH-16.2	MH-16.3	6"	13.69	99.36	188
SL-3	MH-16.3	MH-16.4	6"	14.98	99.29	188
SL-4	MH-16.4	MH-16.5	6"	14.98	99.21	188
SL-5	MH-16.5	MH-16.6	6"	20.6	99.13	188
SL-6	MH-16.6	MH-16.7	6"	8.5	99.02	188
SL-7	MH-16.7	MH-16.8	6"	9.56	98.97	188
SL-8	MH-16.8	MH-16.9	6"	13.57	98.92	188
SL-9	MH-16.9	MH-16.10	6"	12.02	98.85	188
SL-10	MH-16.10	MH-16.11	6"	12.02	98.79	188
SL-11	MH-16.11	MH-16.12	6"	12.02	98.72	188
SL-12	MH-16.12	MH-37	6"	6.93	98.66	188
SUB BRANCH LINE-2 (From MH- 16.8)						
SL-1	MH-16.8.1	MH-16.8.2	6"	13.55	99.85	188
SL-2	MH-16.8.2	MH-16.8	6"	3.99	99.78	188
SUB BRANCH LINE-3 (From MH- 26)						
SL-1	MH-26.1	MH-26	6"	7.06	99.85	188
SUB BRANCH LINE-4 (From MH 31)						
SL-1	MH-31.1	MH-31.2	6"	12.4	99.85	188
SL-2	MH-31.2	MH-31.3	6"	12	99.78	188
SL-3	MH-31.3	MH-31.4	6"	11.3	99.72	188
SL-4	MH-31.4	MH-31.5	6"	7.01	99.66	188
SL-5	MH-31.5	MH-31.6	6"	22.21	99.62	188
SL-6	MH-31.6	MH-31	6"	9.41	99.51	188
SUB BRANCH LINE-5 (From MH 31.4)						
SL-1	MH-31.4.1	MH-31.4.2	6"	12	99.85	188
SL-2	MH-31.4.2	MH-31.4.3	6"	12	99.79	188
SL-3	MH-31.4.3	MH-31.4	6"	12	99.72	188
SUB BRANCH LINE-6 (From MH 31.5)						
SL-1	MH-31.5.1	MH-31.5.2	6"	12	99.85	188
SL-2	MH-31.5.2	MH-31.5.3	6"	12	99.79	188
SL-3	MH-31.5.3	MH-31.5	6"	6.77	99.72	188
SUB BRANCH LINE-7 (From MH 35)						
SL-1	MH-35.1	MH-35.2	6"	13.48	99.85	188
SL-2	MH-35.2	MH-35.3	6"	12.09	99.78	188
SL-3	MH-35.3	MH-35.4	6"	12.09	99.71	188
SL-4	MH-35.4	MH-35.5	6"	12.09	99.65	188
SL-5	MH-35.5	MH-35.6	6"	12.09	99.59	188
SL-6	MH-35.6	MH-35.7	6"	12.09	99.52	188
SL-7	MH-35.7	MH-35.8	6"	7.15	99.46	188
SL-8	MH-35.8	MH-35.9	6"	21.87	99.42	188
SL-9	MH-35.9	MH-35.10	6"	9.31	99.30	188
SL-10	MH-35.10	MH-35.11	6"	12.02	99.25	188
SL-11	MH-35.11	MH-35.12	6"	12.02	99.19	188
SL-12	MH-35.12	MH-35.13	6"	12.02	99.13	188
SL-13	MH-35.13	MH-35.14	6"	12.02	99.06	188
SL-14	MH-35.14	MH-35.15	6"	12.02	99.00	188
SL-15	MH-35.15	MH-35	6"	6.52	98.94	188
SUB BRANCH LINE-8 (From MH 35.8)						
SL-1	MH-35.8.1	MH-35.8.2	6"	13.48	99.85	188
SL-2	MH-35.8.2	MH-35.8.3	6"	12	99.78	188
SL-3	MH-35.8.3	MH-35.8.4	6"	12	99.71	188
SL-4	MH-35.8.4	MH-35.8.5	6"	12	99.65	188
SL-5	MH-35.8.5	MH-35.8.6	6"	12	99.59	188
SL-6	MH-35.8.6	MH-35.8.7	6"	12	99.52	188
SL-7	MH-35.8.7	MH-35.8	6"	6.02	99.46	188
SUB BRANCH LINE-9 (From MH 35)						
SL-1	MH-35.16	MH-35.17	6"	12.02	99.85	188
SL-2	MH-35.17	MH-35.18	6"	12.02	99.79	188
SL-3	MH-35.18	MH-35.19	6"	12.02	99.72	188
SL-4	MH-35.19	MH-35.20	6"	12.02	99.66	188
SL-5	MH-35.20	MH-35.21	6"	12.02	99.59	188
SL-6	MH-35.21	MH-35.22	6"	6.61	99.53	188
SL-7	MH-35.22	MH-35	6"	6.6	99.50	188
SUB BRANCH LINE-10 (From MH 35.22)						
SL-1	MH-35.22.1	MH-35.22.2	6"	12.02	99.85	188
SL-2	MH-35.22.2	MH-35.22.3	6"	12.02	99.79	188
SL-3	MH-35.22.3	MH-35.22.4	6"	12.02	99.72	188
SL-4	MH-35.22.4	MH-35.22	6"	7	99.66	188

Plan of Manhole

d = 900 mm for depth <1000 mm.
d = 1200 mm for depth >1000 mm.
w = width of outer wall as per structure Engineer.

NOTES-

- THE SEWER LINE SHALL BE LAID ON P.C.C. (150THK) OVER COMPACTED EARTH.
- SEWER LINE SHALL BE TESTED FOR ITS LEAKAGE/ INFILTRATION AS RELEVANT IS CODE/MANUAL BEFORE ITS COMMISSIONING.
- ALL MANHOLES SHOULD HAVE UNCUT PIPE INSIDE AT BASE WHICH SHALL BE CUT DURING COMMISSIONING.
- THE MINIMUM INVERT LEVEL SHALL BE 500 MM BELOW EXISTING GROUND.
- MAXIMUM DISTANCE BETWEEN TWO MANHOLES SHALL BE AS PER THE GIVEN TABLE OR AS PER DESIGN.
- DROP MANHOLE SHALL BE PROVIDED WHERE THE DIFFERENCE OF TWO INVERT LEVEL AT A JOINT IS MORE THAN 600 MM.
- ALL PIPES USED UPTO DIAMETER 160MM SHOULD BE SWR CONFORMING TO IS 13592:92 & FITTINGS SHOULD CONFORM TO IS 14735:99 & DIAMETER MORE THAN 160MM SHOULD BE uPVC PRESSURE PIPES & CONFORM TO IS 4985:2000 CLASS B.
- THE WIDTH/DIAMETER OF THE MANHOLE SHOULD NOT BE LESS THAN INTERNAL DIAMETER OF THE SEWER + 150MM BENCHING ON BOTH SIDES (150MM + 150MM).
- MANHOLES SHOULD BE BUILT AT EVERY CHANGE OF ALIGNMENT , GRADIENT OR DIAMETER, AT THE HEAD OF ALL SEWERS & BRANCHES & AT EVERY JUNCTION OF TWO OR MORE SEWERS.
- ON SEWERS WHICH ARE TO BE CLEANED MANUALLY, WHICH CANNOT BE ENTERED FOR CLEANING OR INSPECTION, THE MAXIMUM DISTANCE BETWEEN MANHOLES CAN BE AT 30M MAXIMUM.

LOCATION OF HOUSE CONNECTION MANHOLE ARE INDICATIVE ONLY, FINAL LOCATION IS TO BE DETERMINE BY SITE ENGINEER AS PER THE INTERNAL PLUMBING OF SAID HOUSE

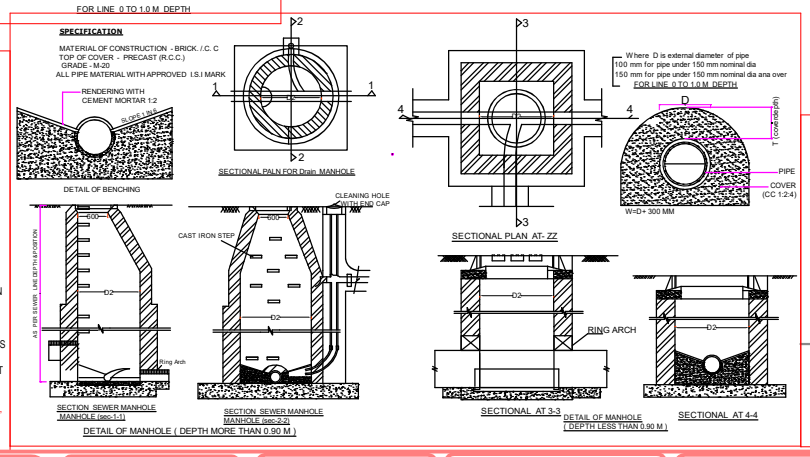

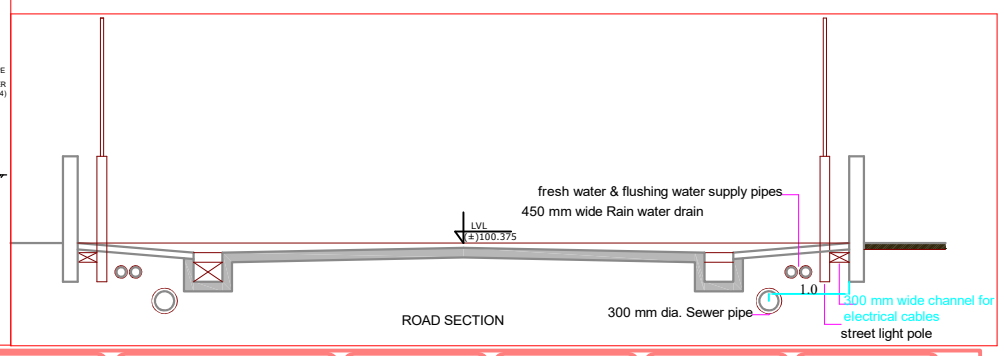

This drawing and/or its contents,information, and principles of design are the exclusive property of Dass Rasayanic Services, Agra and is submitted to you with the agreement that it is not to be reproduced in any manner, copied, or modified, nor is it to be relayed in part or in whole to any other firm or individual for any other project except by written agreement with DASS RASAYANIC SERVICES

DASS RASAYANIC SERVICES
(An ISO 9001:2008 Company)
(An ISO 14001:2008 Company)
#441,H.I.G., Sector - 16,
Sikandra Awas Yojna, Sikandra
Agra- 282007 (U.P.)
Phone & Fax: +91-562-26418666 (24)
mail:- info@wateronline.co.in, drs@wateronline.co.in
web:- www.wateronline.co.in

SHEET DETAILS :
Sheet No.: 1 | Sheet Size: A1 | Version: V4

Engineers' Details:
Drawn By:- ANKIT SACHDEVA
Design Engineer - PHE
Checked By:- DINKAR SAXENA

Current Version Notes:-

Technical Notes:-

NORTH:

Drawing Title: Sewer layout

Project Name: BHAWNA CITY

Signature(Issued By):

For engineering details please refer to see attached calculations.All structural detail are suggestive in nature and are need to haverevision by structural engineers.

PURPOSE OF DRAWING : Tender | Approval | G.F.C.

Signature (Drawn By):

Drawing Number:- DRS-D-324-20

Date:- 11-11-2021

Client's Name:

Version Details:- Version No:- Ver- 2
Date Of Version:-

Description:- Sewer Layout

Previous Version No. & Date:- Ver- 1
Version Notes:

Previous Version No. & Date:-
Version Notes:

Previous Version No. & Date:-
Version Notes:

CONSULTANT :-
DINKAR SAXENA
M.Sc., M.I.E., C.Eng., F.I.P.H.E.
CHARTERED ENGINEER