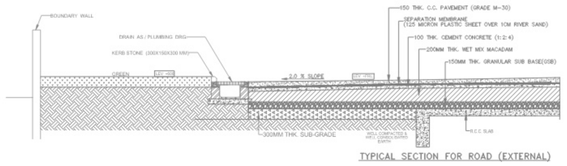

TYPICAL SECTION FOR ROAD (EXTERNAL)

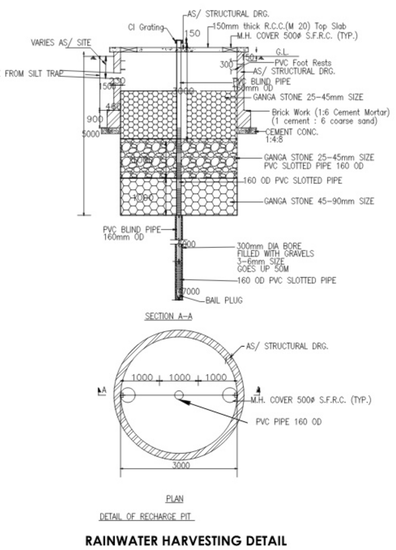

RAINWATER HARVESTING DETAIL

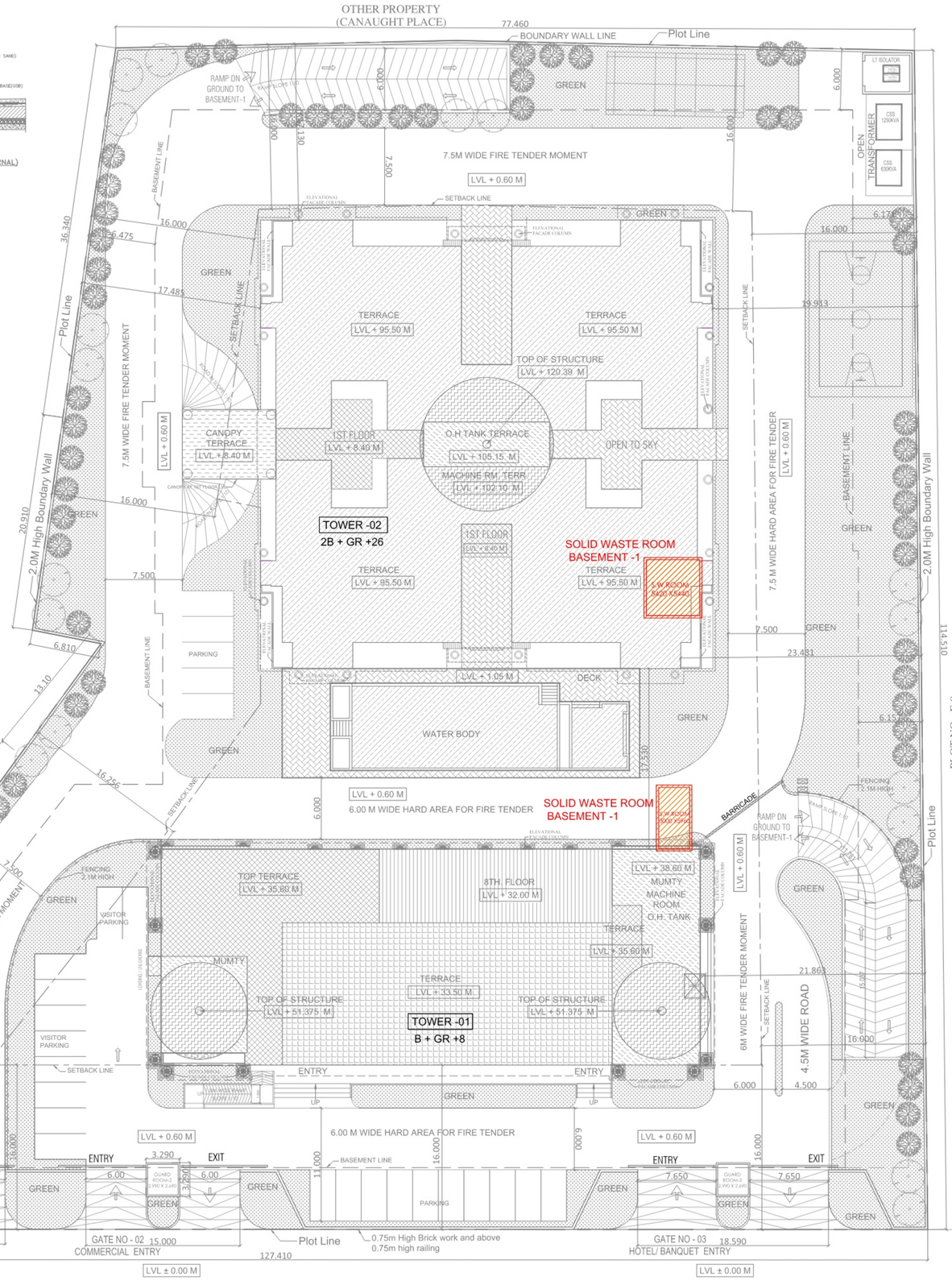

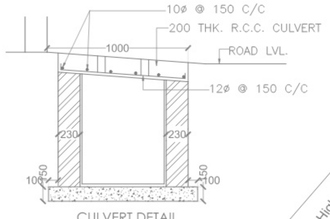

CULVERT DETAIL

A	AREA STATEMENT	VERSION NO.: 1.0.92
		VERSION DATE: 30012024
	PROJECT DETAIL :	
	Authority: Lucknow Development Authority	Plot Use: Commercial
	AuthorityClass: Category A	Plot SubUse: ResiComm Building
	AuthorityGrade: Development Authority (DA)	Development Plan: CG CITY
	CaseTrack: Regular	Land Use Zone: NA
	Project Type: Group Development	Land SubUse Zone: NA
	Nature of Development: NEW	Layout Type: NA
	Development Area: New Area	
	SubDevelopment Area: Other Town Area	
	Special Project: NA	
	Site Address: District:Lucknow, Tehsil:Mohanlalganj, Village:Chak Kajehra	
	AREA DETAILS :	Sq.Mts.
1.	Area of Plot As per record	-
	Document Area	10508.00
	As per site condition	10631.93
	Area of Plot Considered	10508.00
2.	Deduction for	
	(a)Proposed roads	0.00
	(b)Any reservations	0.00
	Total(a + b)	0.00
3.	Net Area of plot (1 - 2) AREA OF PLOT	10508.00
	Green and open space	2198.48
	Plot Area For Coverage	10508.00
	Plot Area For FAR	10508.00
	Perm. FAR Area (2.50)	26270.00
	Perm. Paid FAR Area (1.25)	13135.00
	Total Perm. FAR area with Paid FAR (3.75)	39405.00
	Total Perm. FAR area (3.75)	39405.00
6.	Total Built up area permissible at:	
	Permissible Coverage area (40.00)	4203.20
	Proposed Coverage Area (23.83)	2503.60
	Total Prop. Coverage Area (23.83)	2503.60
	Balance coverage area (16.17)	1699.60

Proposed Area at:

-	Proposed Built up	Existing Built up	Proposed FAR	Existing FAR
Basement First Floor	7784.79	0.00	0.00	0.00
Basement Second Floor	4565.07	0.00	0.00	0.00
Ground Floor	2586.11	0.00	1788.51	0.00
First Floor	2592.50	0.00	2019.53	0.00
Second Floor	2577.44	0.00	2176.19	0.00
Third Floor	2593.12	0.00	1868.18	0.00
Fourth Floor	1536.34	0.00	1235.62	0.00
Fifth Floor	2576.60	0.00	2047.38	0.00
Sixth Floor	2576.60	0.00	2047.38	0.00
Seventh Floor	2588.85	0.00	2060.99	0.00
Eighth Floor	2000.37	0.00	1599.08	0.00
Ninth Floor	1536.34	0.00	1235.62	0.00
Tenth Floor	1536.34	0.00	1235.62	0.00
Eleventh Floor	1536.34	0.00	1235.62	0.00
Twelfth Floor	1536.34	0.00	1235.62	0.00
Thirteenth Floor	1536.34	0.00	1235.62	0.00
Fourteenth Floor	1536.34	0.00	1235.62	0.00
Fifteenth Floor	1536.34	0.00	1235.62	0.00
Sixteenth Floor	1536.34	0.00	1235.62	0.00
Seventeenth Floor	1536.34	0.00	1235.62	0.00
Eighteenth Floor	1536.34	0.00	1235.62	0.00
Nineteenth Floor	1536.34	0.00	1235.62	0.00
Twentieth Floor	1536.34	0.00	1235.62	0.00
Twentyfirst Floor	1536.34	0.00	1235.62	0.00
Twentysecond Floor	1536.34	0.00	1235.62	0.00
Twentythird Floor	1536.34	0.00	1235.62	0.00
Twentyfourth Floor	1536.34	0.00	1235.62	0.00
Twentyfifth Floor	1536.34	0.00	1235.62	0.00
Twentysixth Floor	1536.34	0.00	1235.62	0.00
Terrace Floor	250.84	0.00	0.00	0.00
Service Floor	123.36	0.00	0.00	0.00
Total Area:	62006.11	0.00	39084.02	0.00

	Total FAR Area:	39084.02
	Total BuiltUp Area:	62006.11
	Consumed FAR (Factor)	3.72
C.	Tenement Statement	
4.	Tenement Proposed At:	
	G.F.	1.00
	All Floors	105.00
5.	Total Tenements (3 + 4)	106
E.	Parking Statement	
1.	Parking Space Required as per Regulations:	2365.00
2.	Proposed Parking Space:	15940.31

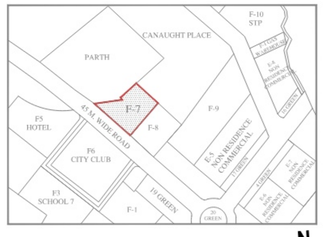

KEY PLAN

CLIENT : -
M/S PURVANCHAL PROJECTS PVT.LTD.

PROJECT : -
PROPOSED COMMERCIAL/ RESIDENTIAL AT PLOT NO. F-7, C.G. CITY, CHAK GANAJARIA, SULTANPUR ROAD, LUCKNOW, U.P

NORTH : -		ARCHITECT : - DEVELOPMENTS CONSULTANT (Architects . Engineers . Urban Designers) 209C, Masjid Moth, (Opp. R-Block, South Extn-II.) New Delhi - 110 049 Ph:- +91 - 11 - 2625 4880 / 49406894
DATE : -	NOV/2023	
SCALE : -	1:250	

■ SUBMISSION DRAWING

TITLE : -

SOLID WASTE DISPOSAL PLAN

OWNER'S SIGN	ARCHITECT SIGN
	DRG. NO. : - S-05