Project Title : PROPOSED SUBMISSION DRAWING FOR THE RESIDENTIAL GROUP HOUSING AT PLOT NO -GGN - GH-02, { TOWER -A (HARMONY) } GOMTI GREENS , (KHASRA NO- 41,42,44&46, VILLAGE - SARSAWA) (AN INTEGRATED TOWNSHIP DEVELOPED BY EMAAR INDIA PVT LTD) LUCKNOW [U.P.]

OWNER- M/S. INCEPTION BUILDTECH PRIVATE LIMITED

File No	LDA/BP/22-23/4139	Sheet	1 / 12
Submission Date	2023-08-25	Scale	1:100

LOCATION PLAN
(NOT TO SCALE)

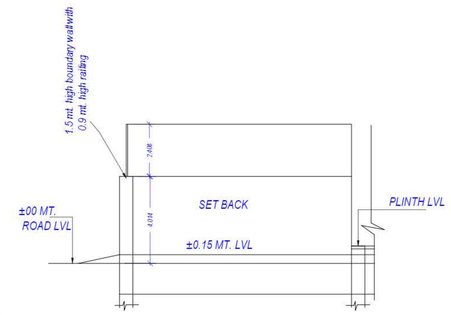

BOUNDARY WALL DETAIL

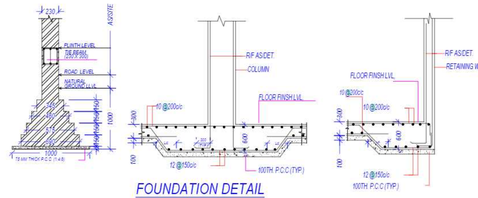

FOUNDATION DETAIL
[AS PER STRUCTURE DRG]
(NOT TO SCALE)

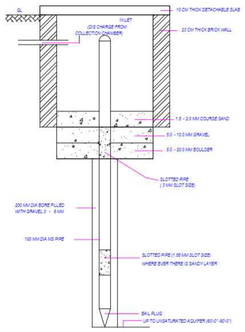

PERCOLATION WELL DETAIL
[NOT TO SCALE]

RAGHAVA ARCHITECTS

Architecture-Structure- Interiors -Valuers-Vastu

HEAD OFFICE:-

PLOT NO :- CS-9, SECOND FLOOR , COMMERCIAL MARKET
GYAN KHAND -II, INDIRAPURAM, GHAZIABAD (UP) INDIA
(NEAR ST. THOMAS SCHOOL)

E mail :- raghavaarchitects@gmail.com, Mob :- 9810379715

A.	AREA STATEMENT	VERSION NO.: 1.0.84
		VERSION DATE: 24/05/2023
	PROJECT DETAIL:	
	Authority: Lucknow Development Authority	Plot Use: Residential
	AuthorityClass: Category A	Plot SubUse: Group Housing
	AuthorityGrade: Development Authority (DA)	Development Plan: EMMAR MGF
	CaseTrack: Regular	Land Use Zone: Residential use Zone
	Project Type: Building Permission	Land SubUse Zone: Residential Zone
	Nature of Development: NEW	Layout Type: NA
	Development Area: New Area	
	SubDevelopment Area: Metro City Area	
	Special Project: NA	
	Site Address: District:Lucknow, Tehsil:Sarojani Nagar, Village:SARSAWAN	
	AREA DETAILS:	Sq.Mts.
1.	Area of Plot As per record	-
	Document Area	12591.43
	As per site condition	12540.62
	Area of Plot Considered	12540.62
2.	Deduction for	
	(a)Proposed roads	0.00
	(b)Any reservations	0.00
	Total(a + b)	0.00
3.	Net Area of plot (1 - 2) AREA OF PLOT	12540.62
	Plot Area For Coverage	12540.62
	Plot Area For FAR	12540.62
	Perm. FAR Area (2.50)	31351.55
	Basic Green Building FAR	1567.58
	Perm. Paid FAR Area (1.25)	15675.77
5.	Total Perm. FAR area with Paid FAR (3.75)	47027.32
	Green Building FAR against Paid FAR	269.15
	Total Perm. FAR area (3.90)	48884.05
	Total Paid Proposed FAR Area	5382.90
6.	Total Built up area permissible at:	
	Permissible Coverage area (35.00 %)	4389.22
	Proposed Coverage Area (15.74 %)	1973.74
	Total Prop. Coverage Area (15.74 %)	1973.74
	Balance coverage area (19.26 %)	2415.48
	Proposed Area at:	

	Proposed Built up	Existing Built up	Proposed F.S.I	Existing F.S.I
Basement Floor	9864.64	0.00	0.00	0.00
Stilt Floor	1463.88	0.00	1249.19	0.00
Ground Floor	777.42	0.00	713.22	0.00
First Floor	769.41	0.00	576.18	0.00
Second Floor	1969.14	0.00	1527.93	0.00
Third Floor	1932.66	0.00	1528.02	0.00
Fourth Floor	1932.66	0.00	1528.02	0.00
Fifth Floor	1932.66	0.00	1528.02	0.00
Sixth Floor	1932.66	0.00	1528.02	0.00
Seventh Floor	1932.66	0.00	1528.02	0.00
Eighth Floor	1932.66	0.00	1528.02	0.00
Ninth Floor	1932.66	0.00	1528.02	0.00
Tenth Floor	1932.66	0.00	1528.02	0.00
Eleventh Floor	1932.66	0.00	1528.02	0.00
Twelfth Floor	1932.66	0.00	1528.02	0.00
Thirteenth Floor	1932.66	0.00	1528.02	0.00
Fourteenth Floor	1932.66	0.00	1528.02	0.00
Fifteenth Floor	1932.66	0.00	1528.02	0.00
Sixteenth Floor	1932.66	0.00	1528.02	0.00
Seventeenth Floor	1976.96	0.00	1483.63	0.00
Eighteenth Floor	1932.66	0.00	1528.02	0.00
Nineteenth Floor	1932.66	0.00	1528.02	0.00
Twentieth Floor	1932.66	0.00	1528.02	0.00
Twentyfirst Floor	1932.66	0.00	1528.02	0.00
Twentysecond Floor	1932.66	0.00	1528.02	0.00
Twentythird Floor	1932.66	0.00	1528.02	0.00
Twentyfourth Floor	1655.92	0.00	1471.17	0.00
Twentyfifth Floor	1215.61	0.00	969.43	0.00
Terrace Floor	312.62	0.00	0.00	0.00
Total Area	58868.80	0.00	38571.15	0.00

Total FAR Area		38571.15
Accessory/Use Area Added in BuiltUp Area:		400.50
Total BuiltUp Area:		59059.30
Proposed F.S.I. consumed:		3.08
C. Tenement Statement		
4. Tenement Proposed At:		
G.F.	4.00	
All Floors	187.00	
5. Total Tenements (3 + 4)	191	
E. Parking Statement		
1. Parking Space Required as per Regulations:		4345.00
2. Proposed Parking Space:		14358.50

Buildingwise Floor FAR Details

Floor Name	Building Name: PROPOSED TOWER A (HARMONY) Proposed Built Up Area (Sq.mt.)	PROPOSED TOWER A (HARMONY) Proposed FAR Area (Sq.mt.)	PROPOSED TOWER B (FAITH) Proposed Built Up Area (Sq.mt.)	PROPOSED TOWER B (FAITH) Proposed FAR Area (Sq.mt.)	PROPOSED TOWER B (WISDOM) Proposed Built Up Area (Sq.mt.)	PROPOSED TOWER B (WISDOM) Proposed FAR Area (Sq.mt.)	Total Proposed Built Up Area (Sq.mt.)	Total FAR Area (Sq.mt.)	Total Paid FAR Area (Sq.mt.)
Basement Floor	9864.64	0.00	0.00	0.00	0.00	0.00	9864.64	0.00	0.00
Stilt Floor	1463.88	1249.19	0.00	0.00	0.00	0.00	1463.88	1249.19	0.00
Ground Floor	0.00	0.00	368.71	356.61	368.71	356.61	777.42	713.22	0.00
First Floor	554.25	487.08	107.58	54.55	107.58	54.55	769.41	576.18	0.00
Second Floor	844.60	658.55	562.27	434.69	562.27	434.69	1969.14	1527.93	0.00
Third Floor	808.12	658.64	562.27	434.69	562.27	434.69	1932.66	1528.02	0.00
Fourth Floor	808.12	658.64	562.27	434.69	562.27	434.69	1932.66	1528.02	0.00
Fifth Floor	808.12	658.64	562.27	434.69	562.27	434.69	1932.66	1528.02	0.00
Sixth Floor	808.12	658.64	562.27	434.69	562.27	434.69	1932.66	1528.02	0.00
Seventh Floor	808.12	658.64	562.27	434.69	562.27	434.69	1932.66	1528.02	0.00
Eighth Floor	808.12	658.64	562.27	434.69	562.27	434.69	1932.66	1528.02	0.00
Ninth Floor	808.12	658.64	562.27	434.69	562.27	434.69	1932.66	1528.02	0.00
Tenth Floor	808.12	658.64	562.27	434.69	562.27	434.69	1932.66	1528.02	0.00
Eleventh Floor	808.12	658.64	562.27	434.69	562.27	434.69	1932.66	1528.02	0.00
Twelfth Floor	808.12	658.64	562.27	434.69	562.27	434.69	1932.66	1528.02	0.00
Thirteenth Floor	808.12	658.64	562.27	434.69	562.27	434.69	1932.66	1528.02	0.00
Fourteenth Floor	808.12	658.64	562.27	434.69	562.27	434.69	1932.66	1528.02	0.00
Fifteenth Floor	808.12	658.64	562.27	434.69	562.27	434.69	1932.66	1528.02	0.00
Sixteenth Floor	786.20	608.55	585.38	437.04	585.38	437.04	1956.96	1483.63	0.00
Seventeenth Floor	808.12	658.64	562.27	434.69	562.27	434.69	1932.66	1528.02	0.00
Eighteenth Floor	808.12	658.64	562.27	434.69	562.27	434.69	1932.66	1528.02	0.00
Nineteenth Floor	808.12	658.64	562.27	434.69	562.27	434.69	1932.66	1528.02	0.00
Twentieth Floor	808.12	658.64	562.27	434.69	562.27	434.69	1932.66	1528.02	0.00
Twentyfirst Floor	808.12	658.64	562.27	434.69	562.27	434.69	1932.66	1528.02	0.00
Twentysecond Floor	808.12	658.64	562.27	434.69	562.27	434.69	1932.66	1528.02	1394.25
Twentythird Floor	808.12	658.64	562.27	434.69	562.27	434.69	1932.66	1528.02	1528.02
Twentyfourth Floor	584.66	527.83	485.53	421.87	485.53	421.87	1655.92	1471.17	1471.17
Twentyfifth Floor	472.11	397.07	371.75	295.66	371.75	295.66	1215.61	989.43	989.43
Terrace Floor	117.94	0.00	97.34	0.00	97.34	0.00	312.62	0.00	0.00
Total	30962.88	17162.87	13847.96	10694.24	13847.96	10694.24	58658.80	38571.15	5382.87

Required Parking(Table 7a)

Building Name	Type	SubUse	Area (Sq.mt.)	Units: Parking space reqd for every	Units: Prop.	Car: Reqd./Unit	Car: Reqd.	Car: Prop.	Visitors Car: Reqd./Unit	Visitors Car: Reqd.	Visitors Car: Prop.
PROPOSED TOWER A (HARMONY)	Community Facility	Community Facility	> 0	100	1616.09	2.00	24	-	-	-	-
	Residential	Group Housing	0 - 50			-	-	-	-	-	-
			50 - 100	1	1.00	1.00	1	-	-	-	-
			100 - 150	1	87.00	1.25	109	-	-	-	-
			> 150	1	4.00	1.50	6	-	-	-	-
			> 0	1	-	-	-	-	1.00	12	-
PROPOSED TOWER B (FAITH)	Commercial	Retail Shop	> 0	100	86.17	1.25	2	-	-	-	-
	Community Facility	Community Facility	> 0	100	270.43	2.00	4	-	-	-	-
	Residential	Group Housing	0 - 50	1	-	-	-	-	-	-	-
			50 - 100	1	-	1.00	-	-	-	-	-
			100 - 150	1	-	1.25	-	-	-	-	-
			> 150	1	46.00	1.50	69	-	-	-	-
			> 0	1	-	-	-	-	1.00	7	-
PROPOSED TOWER B (WISDOM)	Commercial	Retail Shop	> 0	100	86.17	1.25	2	-	-	-	-
	Community Facility	Community Facility	> 0	100	270.43	2.00	4	-	-	-	-
	Residential	Group Housing	0 - 50	1	-	-	-	-	-	-	-
			50 - 100	1	-	1.00	-	-	-	-	-
			100 - 150	1	-	1.25	-	-	-	-	-
			> 150	1	46.00	1.50	69	-	-	-	-
			> 0	1	-	-	-	-	1.00	7	-
Total :			-	-	-	-	290	291	-	26	27

Parking Check (Table 7b)

Vehicle Type	Reqd. No.	Reqd. Reduced Reqd Parking (Incase of Plot having RWAreas surrendered FOC)	Reqd. Area	Prop. No.	Prop. Area
Equivalent Car Space	-	-	-	274	3767.59
Two Stack Car	-	-	-	17	233.75
Total Car	290	-	3987.50	291	4001.25
Visitor's Car Parking	26	-	357.50	27	371.25
Other Parking	-	-	-	-	9961.88
Total			4345.00		14334.38

Tree Details (Table 3h)

Plot	Name	Nos Of Trees: Reqd	Nos Of Trees: Prop
PROPOSED SITE	Tree	63	65

Green and open space Area

Name	Prop. Area
GREEN-1	919.91
GREEN -2	320.50
GREEN -3	309.52

FAR & Unit Details

Building	No. of Same Bldg	Gross Built Up Area (Sq.mt.)	Deductions From Gross BUA(Area in Sq.mt.): VShaft	Void	Ramp	Total Built Up Area (Sq.mt.)	Deductions (Area in Sq.mt.): Mumty	Lift	Lift Machine	Lift Lobby	Balcony	Double Height	Accessory Use	Ramp	Refuge Area	Covered Area	Parking	Proposed FAR Area (Sq.mt.): Resi.	Commercial	Amenities	Total FAR Area (Sq.mt.)	No. of Unit
PROPOSED TOWER A (HARMONY)	1	31634.95	334.01	193.58	144.77	30962.88	711.25	584.60	28.61	234.52	2435.72	307.41	320.47	98.61	48.25	428.17	9468.15	15566.58	0.00	1616.09	17162.67	95
PROPOSED TOWER B (FAITH)	1	14067.88	236.99	8.93	0.00	13847.96	589.40	454.75	29.24	372.06	1673.74	61.53	0.00	0.00	24.76	90.05	0.00	10337.63	86.17	270.43	10694.24	48
PROPOSED TOWER B (WISDOM)	1	14067.88	236.99	8.93	0.00	13847.96	589.40	454.75	29.24	372.06	1673.74	61.53	0.00	0.00	24.76	90.05	0.00	10337.63	86.17	270.43	10694.24	48
Grand Total	3	59810.71	795.99	211.45	144.77	58658.80	1890.05	1494.10	107.05	978.64	5783.21	430.47	320.47	98.61	97.77	619.27	9468.15	36241.84	172.34	2156.96	38571.15	191

Building USE/SUBUSE Details

Building Name	Building Use	Building SubUse	Building Use Group	Building Type	Building Structure	No Of Residential Units	No Of Non-Residential Units	Floor Name	Floor Use	Floor SubUse	FAR Name	FAR Use	FAR SubUse
PROPOSED TOWER A (HARMONY)	Residential	Group Housing		-	Highrise	92	3	BASEMENT FLOOR PLAN	Residential + Parking +STORAGE +MET RM +STP +PUMP RM +AC PLANT	Group Housing	-	-	-
								STILT FLOOR PLAN	Community Facility + Parking	Community Facility	Community Facility	Community Facility	Community Facility
											Community Facility	Community Facility	Community Facility
								FIRST FLOOR PLAN	Community Facility	Community Facility	Residential FAR	Residential	Group Housing
											Community Facility	Community Facility	Community Facility
								SECOND FLOOR PLAN	Residential	Group Housing	Residential FAR	Residential	Group Housing
								TYPICAL -3, 4, 5, 6, 7, 8, 9, 10, 11, 12, 13, 14, 15, 16, 18, 19, 20, 21, 22, 23 FLOOR PLAN	Residential	Group Housing	Residential FAR	Residential	Group Housing
								SEVENTEENTH FLOOR PLAN	Residential	Group Housing	Residential FAR	Residential	Group Housing
								TWENTYFOURTH FLOOR PLAN	Residential	Group Housing	Residential FAR	Residential	Group Housing
								TWENTYFIFTH FLOOR PLAN	Residential	Group Housing	Residential FAR	Residential	Group Housing
								TERRACE FLOOR PLAN	Residential	Group Housing	-	-	-
PROPOSED TOWER B (FAITH)	Residential	Group Housing		-	Highrise	46	2	GROUND FLOOR PLAN	Community Facility	Community Facility	Commercial	Commercial	Retail Shop
											Community Facility	Community Facility	Community Facility
								FIRST FLOOR PLAN	Residential	Group Housing	Residential FAR	Residential	Group Housing
								TYPICAL -2-16, 18-23 FLOOR PLAN	Residential	Group Housing	Residential FAR	Residential	Group Housing
								SEVENTEENTH FLOOR PLAN	Residential	Group Housing	Residential FAR	Residential	Group Housing
								TWENTYFOURTH FLOOR PLAN	Residential	Group Housing	Residential FAR	Residential	Group Housing
								TWENTYFIFTH FLOOR PLAN	Residential	Group Housing	Residential FAR	Residential	Group Housing
								TERRACE FLOOR PLAN	Residential	Group Housing	-	-	-
PROPOSED TOWER B (WISDOM)	Residential	Group Housing		-	Highrise	46	2	GROUND FLOOR PLAN	Community Facility	Community Facility	Commercial	Commercial	Retail Shop
											Community Facility	Community Facility	Community Facility
								FIRST FLOOR PLAN	Residential	Group Housing	Residential FAR	Residential	Group Housing
								TYPICAL -2-16, 18-23 FLOOR PLAN	Residential	Group Housing	Residential FAR	Residential	Group Housing
								SEVENTEENTH FLOOR PLAN	Residential	Group Housing	Residential FAR	Residential	Group Housing
								TWENTYFOURTH FLOOR PLAN	Residential	Group Housing	Residential FAR	Residential	Group Housing
								TWENTYFIFTH FLOOR PLAN	Residential	Group Housing	Residential FAR	Residential	Group Housing
								TERRACE FLOOR PLAN	Residential	Group Housing	-	-	-

Total Plot Area: -	12540.62	Total FAR Area: -	38571.15
Total Coverage Area: -	1973.74	Total BUA Area: -	58658.80

OWNER'S NAME AND SIGNATURE

INCEPTION BUILDTECH PVT LTD,bmairec.dutt@eldecoproperties.com,9999144403

For Inception Buildtech Pvt Ltd
Authorised Signatory

ARCHIENG'S NAME AND SIGNATURE

Rajneesh Kumar	pankishgoel
CA/2017/86949	1286079

Lucknow Development Authority

Building Plan Application Number	LDA/BP/22-23/4139
Sanctioned On	14 Sep 2023
Valid Till	15 Sep 2028
Approved By	Vice Chairman (Vice Chairman)
Examined By	Atul Sharma (Junior engineer)
	Shiv Kumar (Junior engineer)
	Alka Singh (Assistant Engineer)
	Shiv Kumar (Junior engineer)
	Alka Singh (Assistant Engineer)
	Sanjay Jindal (Executive engineer/Town Planner)

Note: - 1) This drawing is prepared as per the current prevailing Building Bye Laws.
2) If Map sanctioned is used for purpose anything other than stated in application will lead to rejection of Map.

ISO_A0_(841.00_x_1189.00_MM)

The correctness and accuracy of Proposal Information and drawing is a responsibility of PO/Owner. Accuracy of Scrutiny Report is subject to accuracy of end-user provided data, 3rd party software/hardware/services, etc. SoftTech Engineers Ltd. is not liable for any damages which may arise from use, or inability to use the Application. Texts printed in 'Italics' and 'Blue' color are user inputs, which are not verified and not generated by scrutiny software.