Project Title :REVISED LAYOUT PLAN OF SARITA DHAM (OLD NAME - PRABHU ENCLAVE) ON KHASRA NO - 236,239 (PART) 240 MAUZA PATHUALI SHAHGANJ WARD TEHSIL AGRA. OWNER M/S RAINBOW INFRA HOUSING PVT LTD. TH. DIRECTOR SHRI MOHIT DADOO (MO) 9927016371

File No	ADA/LD/20-21/0492	Sheet	2
Submission Date	2021-01-27	Scale	1:100

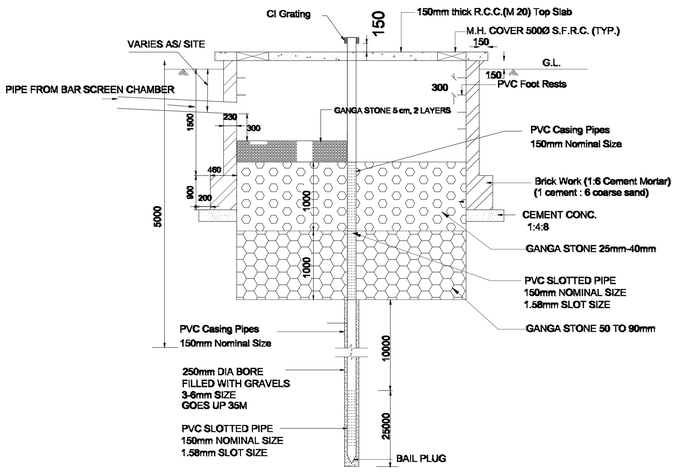

SECTION A-A

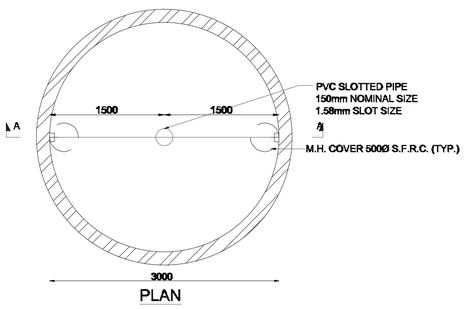

PLAN

DETAIL OF PERCOLATION PIT

SAZRA PLAN PART

NOT TO SCALE

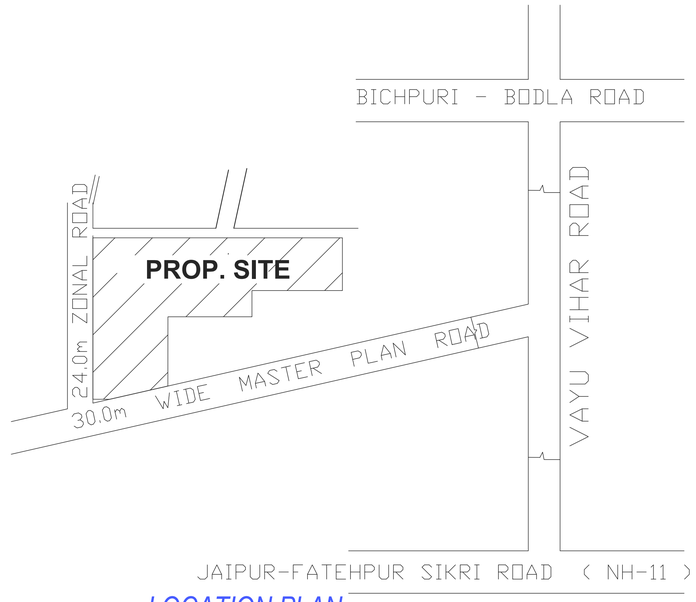

LOCATION PLAN

KEY PLAN

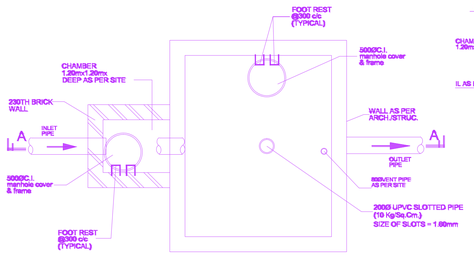

PLAN OF HARVESTING PIT

(2.50 X 3.50)

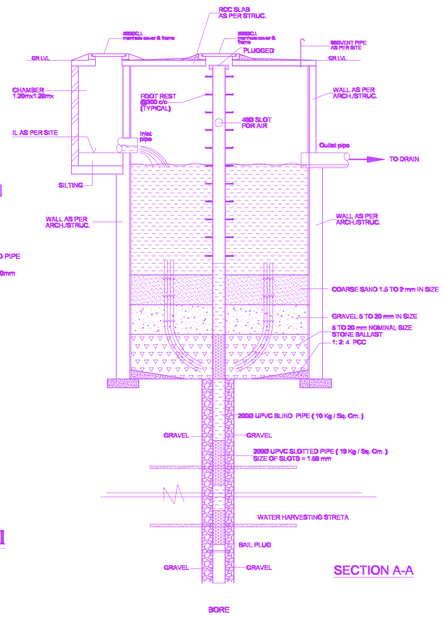

SECTION A-A

Rain Water Harwesting Detail

OWNER NAME & SIGNATURE
M/S RAINBOW INFRA HOUSING PVT. LTD. DIRECTOR SHRI MOHIT DADOO (MO- 9927016371)

OWNER'S NAME AND SIGNATURE	
Mohit Dadoo(Director),modernhouseplanner@gmail.com,9897690908	
ARCH/ENG'S NAME AND SIGNA	INEER
Arvind Kumar Upadhyay AM/1388655/04042019	
	Agra Development Authority

Document certified by RAJENDER PENSIYA
<vcadaagra@gmail.com>,
Name : RAJENDER PENSIYA
Designation : Vice Chairman
Organization : AGRA DEVELOPMENT AUTHORITY AGRA
Date : 07-Jun-2021 18: 20:37

Building Plan Application Number	ADA/LD/20-21/0492
Sanctioned On	24 May 2021
Valid Till	06 Jun 2026
Approved By	Rajender Pensiya (Vice Chairman)
Examined By	Satish Chand Rajpoot (Junior engineer) NARENDRA KUMAR CHAUDHARY (Executive Engineer/ Town Plann RK Singh (Chief Town Planner) Rajendra Prasad Tripathi (Secretory) Rajender Pensiya (Vice Chairman) Rajender Pensiya (Vice Chairman)

Total Plot Area: -	20471.95	Total FAR Area: -	0.00
Total Coverage Area: -	0.00	Total BUA Area: -	0.00

Note: - 1) This drawing is prepared as per the current prevailing Building Bye Laws.
2) If Map sanctioned is used for purpose anything other than stated in application will lead to rejection of Map.

ISO_A0_(841.00_x_1189.00_MM)

The correctness and accuracy of Proposal Information and drawing is a responsibility of PDR/owner. Accuracy of Scrutiny Report is subject to accuracy of end-user provided data, 3rd party software/hardware/services, etc. SoftTech Engineers Ltd. is not liable for any damages which may arise from use, or inability to use the Application. Texts printed in 'Italics' and 'Blue' color are user inputs, which are not verified and not generated by scrutiny software.