PRODUCED BY AN AUTODESK EDUCATIONAL PRODUCT

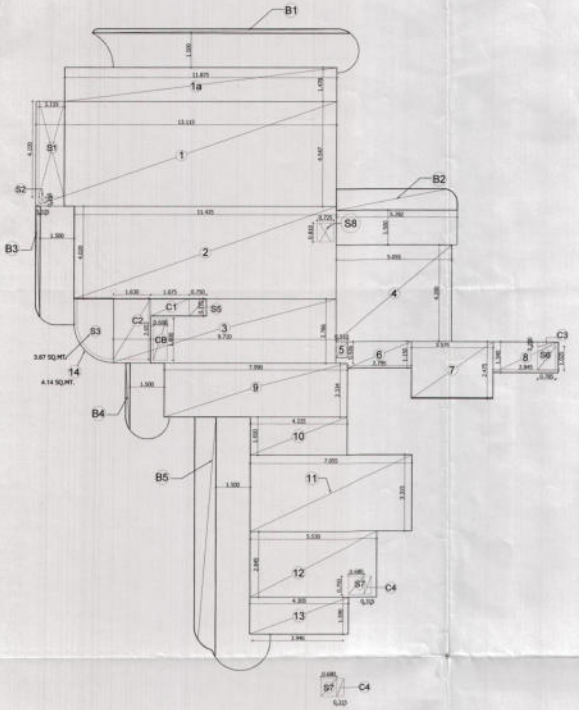

FIRST & TYPICAL FLOOR
(1,3,5,7,9,11,13,15,17,19,21,23,25,27,29,31)
F.A.R AREA CALCULATION
UNIT TYPE-I 4BHK BLOCK- T4

F.A.R AREA DETAIL OF TYP.FLOOR 4BHK BLOCK-T4 UNIT TYPE- II						
ITEM	WIDTH		LENGTH	NO	AREA(SQ.M)	
1	13.115	X	4.547	1	59.634	
1-a	11.675	X	1.475	1	17.551	
2	11.425	X	4.030	1	45.929	
3	9.710	X	2.790	1	27.092	
4	5.086	X	4.200	1	21.231	
5	0.610	X	0.680	1	0.347	
6	2.795	X	1.130	1	3.214	
7	2.575	X	2.475	1	6.846	
8	2.845	X	1.340	1	3.812	
9	7.990	X	2.330	1	18.617	
10	4.220	X	1.650	1	6.971	
11	7.055	X	3.315	1	23.387	
12	5.530	X	2.845	1	15.733	
13	4.305	X	1.595	1	6.845	
14	AREA AS PER POLYLINE (SQ.M)			1	3.730	
B1	AREA AS PER POLYLINE (SQ.M)			0.25	0.466	
B2	AREA AS PER POLYLINE (SQ.M)			0.25	1.201	
B3	AREA AS PER POLYLINE (SQ.M)			0.25	0.220	
B4	AREA AS PER POLYLINE (SQ.M)			0.25	0.123	
B5	AREA AS PER POLYLINE (SQ.M)			0.25	2.302	
				TOTAL	267.245	- (1)
DEDUCTION						
S1	1.115	X	4.160	1	4.637	0.000
S2	0.325	X	0.260	1	0.085	
S3	AREA AS PER POLYLINE (SQ.M)			1	3.67	
S4	1.630	X	1.580	1	2.575	0.000
S5	0.750	X	0.770	1	0.578	0.000
S6	0.785	X	1.025	1	0.805	0.000
S7	0.680	X	0.793	1	0.539	0.000
S8	0.725	X	0.810	1	0.587	0.000
C1	1.670	X	0.770	1	1.290	0.000
C2	1.630	X	2.653	1	4.324	0.000
C3	2.785	X	0.200	1	0.157	0.000
C4	0.310	X	0.793	1	0.250	0.000
CB	2.600	X	1.800	1	1.950	0.000
				TOTAL	20.57	- (2)
NET FAR AREA DETAIL OF TYPES-I 4BHK BLOCK T-4 = (1) - (2)						
				=	246.68	

BALCONY AREA TYPE-I 4BHK BLOCK T4				
ITEM	DESCRIPTION	WIDTH	LENGTH	AREA(SQ.M)
A	TOTAL BALCONY	ASPLINE		71.815
B	BALCONY FAR	ASPLINE		4.37
C	BALCONY NON FAR AREA	=A-		67.55

TYPICAL FLOOR (TYPE-I) AREA DETAIL FOR 10% OF SERVICES FAR						
ITEM	WIDTH		LENGTH	NO	AREA(SQ.M)	
S1	1.115	X	4.160	1	4.637	0.000
S2	0.325	X	0.260	1	0.085	
S3	AREA AS PER POLYLINE (SQ.M)			1	3.67	
S4	1.630	X	1.580	1	2.575	0.000
S5	0.750	X	0.770	1	0.578	0.000
S6	0.785	X	1.025	1	0.805	0.000
S7	0.680	X	0.793	1	0.539	0.000
S8	0.725	X	0.810	1	0.587	0.000
C8	0.600	X	1.800	1	1.080	0.000
				TOTAL	14.55	- (2)

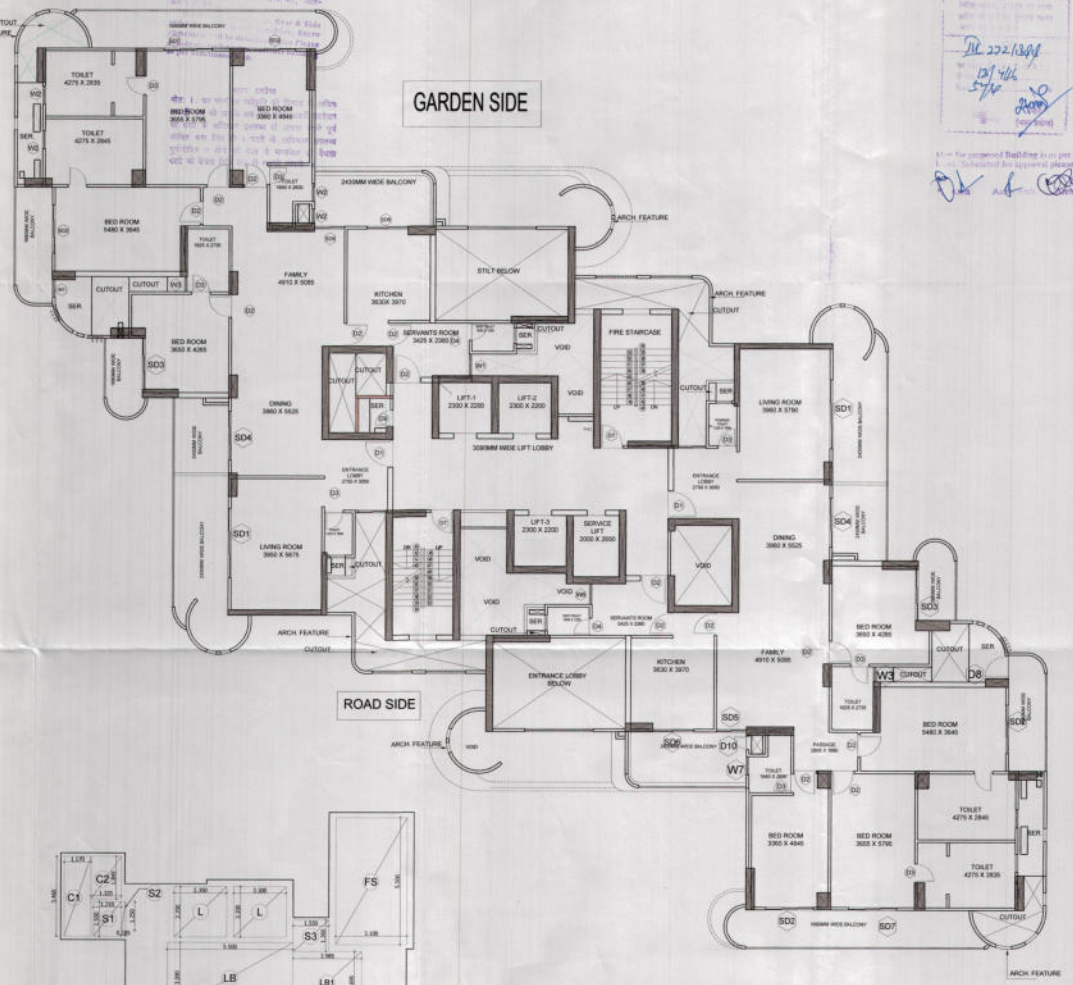

FIRST & TYPICAL FLOOR CORE
DEDUCTION AREA CALCULATION CHART

FIRST/TYPICAL FLOOR CORE AREA DETAIL IN F.A.R						
ITEM	WIDTH		LENGTH	NO	AREA(SQ.M)	
1	2.795	X	3.765	1	10.528	0.000
2	3.575	X	2.405	1	8.599	0.000
3	3.775	X	2.620	1	9.890	0.000
4	1.550	X	0.970	1	1.504	0.000
5	3.700	X	5.915	1	21.886	0.000
6	8.900	X	3.315	1	29.503	0.000
7	3.385	X	3.315	1	11.221	0.000
8	3.250	X	5.530	1	17.973	0.000
9	3.765	X	2.615	1	9.846	0.000
10	3.420	X	2.435	1	8.326	0.000
11	1.010	X	0.450	1	0.455	0.000
12	0.155	X	0.210	1	0.033	0.000
				TOTAL	129.831	- (1)
DEDUCTION						
LB	5.500	X	3.095	1	16.945	0.000
LB1	2.985	X	2.695	1	8.045	0.000
L	2.350	X	2.050	2	15.180	0.000
L1	2.000	X	2.650	1	5.300	0.000
FS	3.100	X	5.500	1	17.050	
S1	1.210	X	1.500	1	1.815	0.000
S2	0.185	X	1.250	1	0.231	0.000
S3	1.560	X	1.360	1	2.108	0.000
C1	1.170	X	3.400	1	4.048	0.000
C2	1.325	X	1.845	1	2.445	0.000
				TOTAL	73.22	- (2)
NET FIRST / TYPICAL FLOOR CORE AREA DETAIL IN F.A.R = (1) - (2)						
				=	56.63	

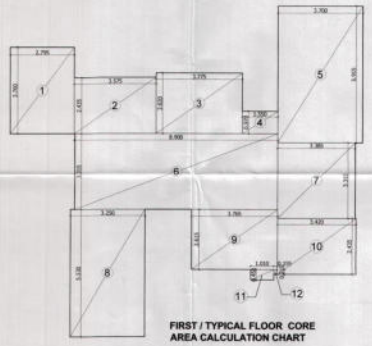

FIRST / TYPICAL FLOOR CORE
AREA CALCULATION CHART

FIRST / TYPICAL FLOOR CORE
SERVICE AREA CALCULATION CHART

FIRST/TYPICAL FLOOR CORE AREA DETAIL IN F.A.R						
ITEM	WIDTH		LENGTH	NO	AREA(SQ.M)	
LB	5.500	X	3.095	1	16.985	0.000
LB1	2.985	X	2.695	1	8.045	0.000
FS	3.100	X	5.500	1	17.050	
S1	1.210	X	1.500	1	1.815	0.000
S2	0.185	X	1.250	1	0.231	0.000
S3	1.560	X	1.360	1	2.108	0.000
				TOTAL	46.24	- (2)

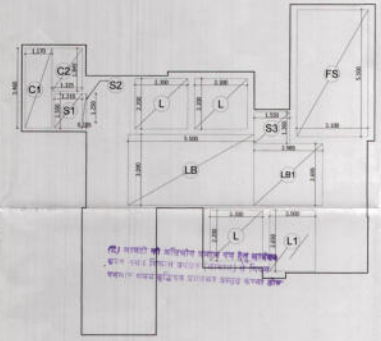

FIRST / TYPICAL FLOOR CORE
DEDUCTION AREA CALCULATION CHART

FIRST & TYPICAL FLOOR
(1,3,5,7,9,11,13,15,17,19,21,23,25,27,29,31,33)
PLAN 4 B.H.K STAGGERED

[REVISED PLAN]

For NEXGEN INFRACON PVT. LTD.
Authorised Signatory

REVISED SUBMISSION DRAWING FOR GROUP HOUSING AT GH-01/A, SECTOR 78, NOIDA,U.P.	OWNER: NEXGEN INFRACON PVT. LTD. B-66, FIRST FLOOR, VIVEK VIHAR, NEW DELHI - 110095.	BUILDING TYPE : 4 BHK STAGGERED	SCALE : 1: 100	DRG. NO. SD-30	TITLE TYPICAL FLOOR & CORE PLAN AND AREA CALCULATION
		BUILDING NAME: ETERNIA	DATE: DEC, 2015	ARCHITECT's SIGNATURE:	THIS DRAWING IS THE PROPERTY OF NEXGEN INFRACON PVT. LTD. AND SHALL NOT BE USED,COPIED OR REPRODUCED WITHOUT THEIR WRITTEN PERMISSIOM
			OWNER' s SIGNATURE:		ARCHITECTS

PRODUCED BY AN AUTODESK EDUCATIONAL PRODUCT