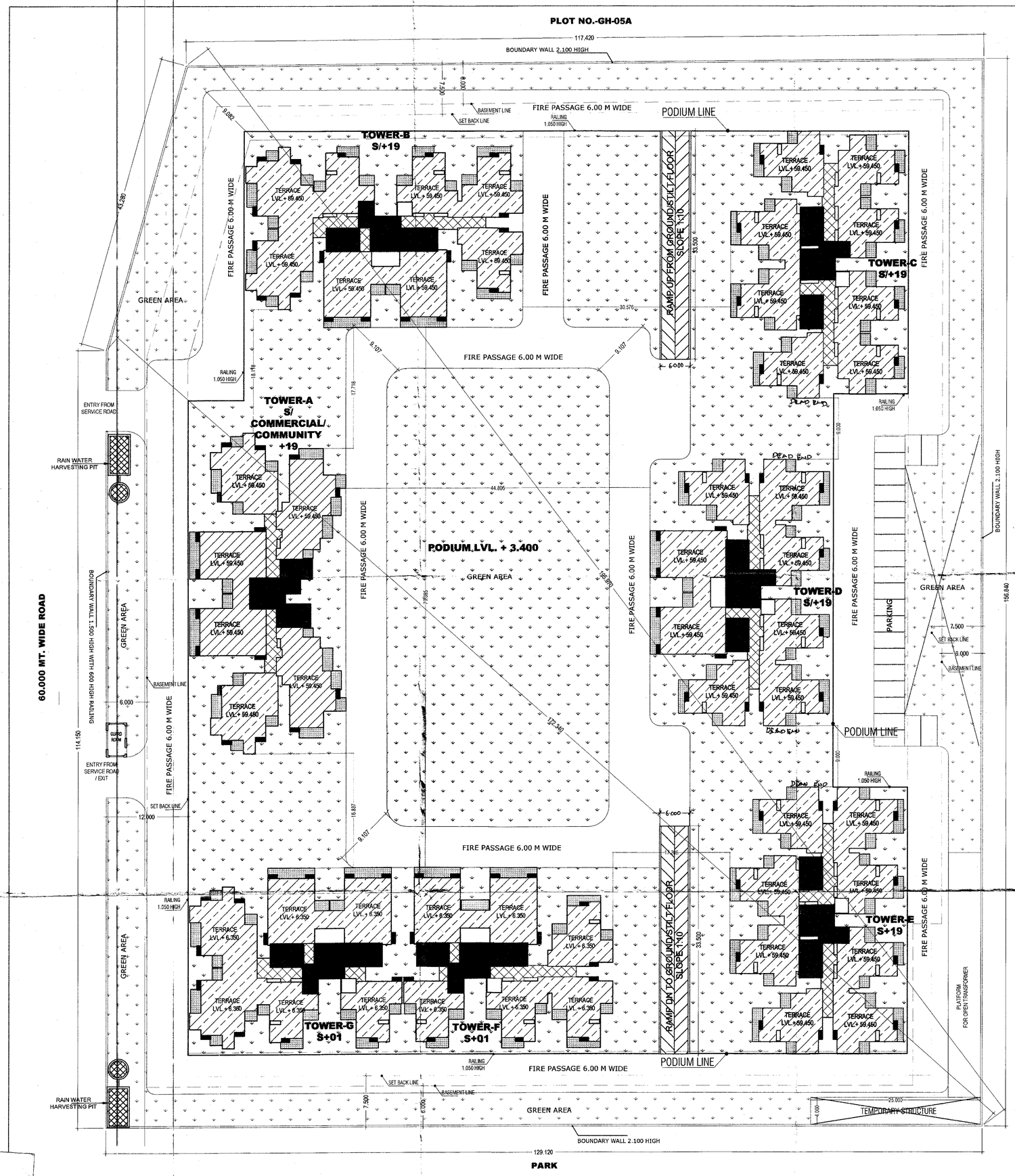

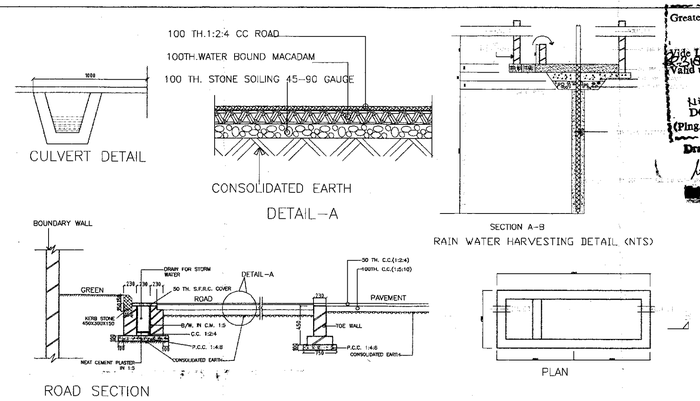

Greater Noida Industrial Dev. Authority
APPROVED
Vide Letter No. 512 Dated 26/06/15
Valid upto Dated ...
DGM (Plng. & Arch.) Sr. Manager (Plng. & Arch.)
Drawing Checked & Verified by

LAYOUT PLAN

S-01

NOTE:
*TOWER A IS TYPICAL
*TOWER B IS TYPICAL
*TOWER C IS TYPICAL
*TOWER D IS TYPICAL
*TOWER E IS TYPICAL
*TOWER F IS TYPICAL
*TOWER G IS TYPICAL

NOTE: 2
*AREA CHART IS IN SHEET NO. - S-02

NOTE: 3
*MECHANICAL VENTILATION SHALL BE PROVIDED IN BASEMENT.

PLOT AREA	=	20000.000	SQ MT
PERMISSIBLE FAR 2.75	=	55000.000	SQ MT.
PERMISSIBLE GROUND COVERAGE 35 %	=	7000.000	SQ MT.
PROPOSED FAR (2.743)	=	54862.902	SQ MT.
PROPOSED GROUND COVERAGE (20.58 %)	=	4116.825	SQ MT.
PERM. ANCILLARY AREA	=	55000.000 x 0.15 = 8250 SQ MT (15% OF FAR AREA)	
PROPOSED ANCILLARY AREA (12.32%)	=	6778.263	SQ MT.
PERM. COMMERCIAL AREA (1 % OF FAR)	=	550.000	SQ MT.

PROPOSED COMMERCIAL AREA

PROPOSED COMMERCIAL AREA IN TOWER - A	=	213.348	SQ MT. REFF. SHEET - 6
TOTAL COMMUNITY AREA (TOWER - A)	=	**184.882**	**SQ MT.** REFF. SHEET - 6
TOTAL BASEMENT AREA	=	**16546.599**	**SQ MT.**
MAXIMUM HEIGHT	=	**65.680**	**MT.**

PARKING DETAILS

PARKING REQUIRED = F.A.R / 80 = 55000.00/80
= 687.50 ECS
SAYS = 688 ECS

PARKING IN BASEMENT

TOTAL BASEMENT AREA FOR PARKING
= 16546.599 - (70.262+261.000+275.837+291.150+365.163)
= 16546.599 - 1263.412 = 15283.187 SQ MT.
= 15283.187 / 30 = 509.440 = SAY 509 ECS

PARKING IN STILT

TOTAL AREA PROVIDED FOR STILT PARKING = 2960.942 SQM
ECS IN OPEN AREA = 2960.942/30 = 98.968 SAY 98 ECS

PARKING IN PODIUM

TOTAL AREA PROVIDED FOR PODIUM = 9331.414 SQ MT.
NET AREA PROVIDED FOR PODIUM FOR PARKING
= PODIUM AREA - RAMP
= 9331.414 - 261.000
ECS IN PODIUM AREA = 9070.414/30 = 302.347 SAY 302 ECS

PARKING IN OPEN

TOTAL AREA PROVIDED FOR ~~STILT~~ OPEN PARKING = 248.345 SQM
ECS IN OPEN AREA = ~~248.000~~ 248.345/20 = 12.400 SAY 12 ECS

TOTAL PARKING PROVIDED

TOTAL ECS PROVIDED = 509+98+302+12 = 921 ECS

CALCULATION OF NET PODIUM AREA

TOTAL AREA PROVIDED FOR PODIUM
= TOTAL PODIUM AREA INCLUDING STILT - [STILT AREA + F.A.R AREA AT GR. FL. + ANCILLARY AREA AT GR. FL.]
= 13433.239 - [2960.942 + 962.964 + 177.919]
= 9331.414 SQ MT.

LEGENDS FOR LANDSCAPING

EVERGREEN TREE (80)
- ASHOKA - 40 NO.S
- GULMOHAR - 40 NO.S

ORNAMENTAL TREE (80)
- BOTTLE PALM - 40 NO.S
- BAMBOO - 40 NO.S

GREEN AREA DETAIL

REQUIRED SOFT GREEN AREA= 50% OF OPEN AREA
OPEN AREA=PLOT AREA - GROUND COVERAGE = 20000-4116.825 = 15883.175 SQM
HENCE SOFT GREEN AREA REQUIRED = 15883.175/2 = 7941.588 SQM
SOFT AREA PROVIDED = 9310.673 SQM.
TREES REQUIRED = OPEN AREA/100
= 15883.175/100
= 158.831 SAY 159 TREES
TREES PROVIDED = 160 (50%EVERGREENAND 50%ORNAMENTAL)

TEMPORARY STRUCTURE

AREA OF TEMPORARY STRUCTURE = 25.000X4.000
= 100.000 SQ MT.

ELECTRICAL LOAD = 2280 **KVA**

BUILT UP AREA

TOTAL FAR AREA		TOTAL NON FAR AREA		TOTAL ANCILLARY AREA
54862.902	+	28838.955	+	6778.263
TOTAL AREA	=	**90480.120 SQMT**		

PROJECT TITLE :
PROPOSED GROUP HOUSING AT PLOT NO.GH-5C,SECTOR- 16, GREATER NOIDA.
FOR - M/S RUDRA BUILDWELL INFRA PVT. LTD.

DRAWING TITLE:- LAYOUT PLAN
DRG NO. S-01

SCALE	1:300
DATE	20130521
DEALT	
JOB NO.	\\Comp7\D\VICTORY AMARA\20130522_SUBMISSION\ 20130522_SUBMISSION

DEEPAK MEHTA & ASSOCIATES
ARCHITECTS, PLANNERS, VALUERS, LANDSCAPE & INTERIORS
PLOT NO. 16 ABHISHEK PLAZA L.S.C. MAYUR VIHAR PH II DELHI 91
PH: 65272180 TELEFAX: 22770180

M/s Rudra Buildwell Infra Pvt. Ltd.
Authorised Signatory
OWNER'S SIGN

Architect Deepak Mehta
CA/87/10840
Plot No. 16 Abhishek Plaza LSC
Mayur Vihar Ph-II, Delhi-91
ARCHITECT'S SIGN.

M.P. GOEL
CA/80/5685
ENGINEER'S SIGN