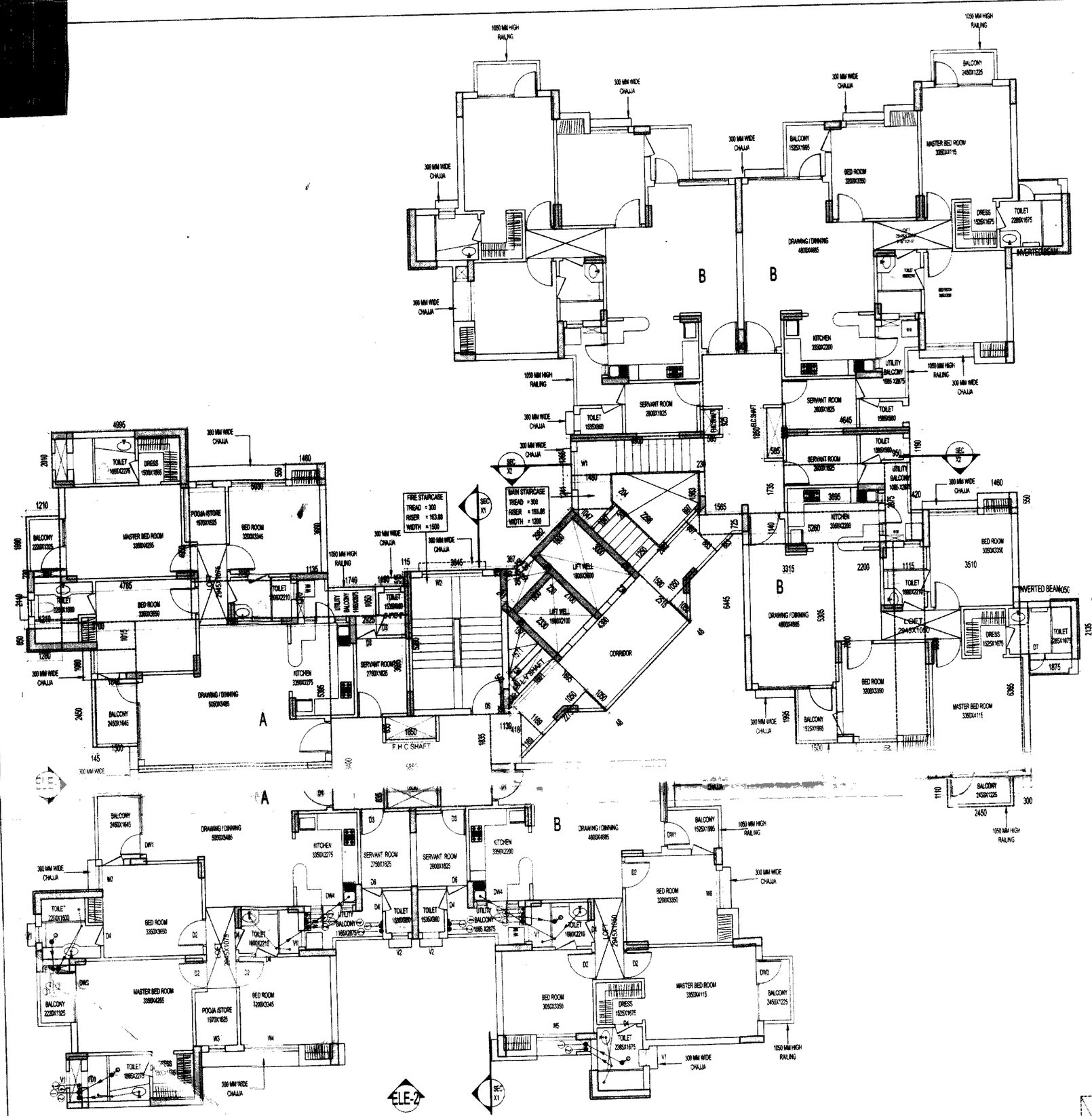

TYPICAL FLOOR F.A.R AREA = TYPE- A X 2 + TYPE-B X 4 + CIRCULATION AREA
= 116.25 X 2 + 101.26 X 4 + 48.302
= 232.5 + 405.04 + 48.302
= 685.842 SQMT

AREA COUNTED TOWARDS 15% FAR = 71.797 SQM

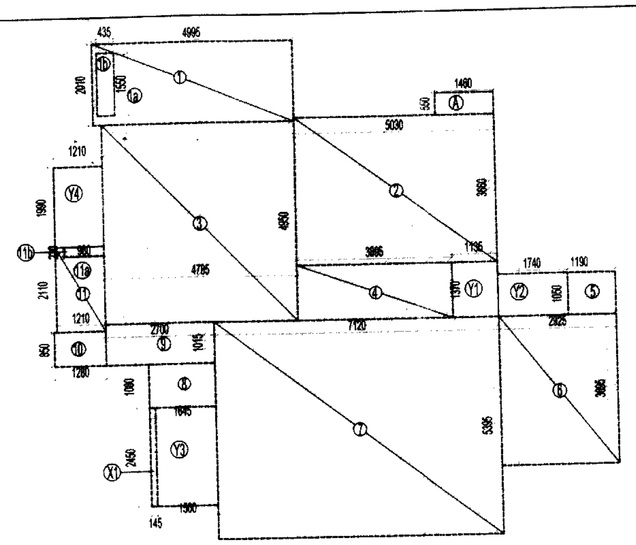

AREA DIAGRAM FOR TYPE -A

F.A.R. COVERED AREA CALCULATION FOR TYPE - A							
S.NO.	PARTICULARS						AREA (SQ.M)
1	1+1a-1b				+		9.366
1a	4.995	X	2.010	+	10.040		
1b	0.435	X	1.550	+	0.674		
2	5.030	X	3.660	+			18.410
3	4.795	X	4.950	+			23.686
4	3.895	X	1.370	+			5.336
5	1.190	X	1.050	+			1.250
6	2.925	X	3.695	+			10.808
7	7.120	X	5.356	+			38.412
8	1.645	X	1.080	+			1.777
9	2.700	X	1.015	+			2.741
10	1.280	X	0.850	+			1.088
11	11+11a-11b			+			2.328
11a	1.210	X	2.110	+	2.553		
11b	0.980	X	0.230	+	0.225		
	TOTAL F.A.R AREA OF TYPE - A			+			115.200

F.A.R AREA OF BALCONY (A)= (X1) / 2							
X1	3.145	X	2.450	+	2.099		
				+	2.099		
TOTAL(B)							1.050

TOTAL F.A.R AREA FOR TYPE -A = TYPE (A) AREA + BALCONY AREA
= 115.200 + 1. 050 = 116.25 SQMT

NON F.A.R AREA OF BALCONY (A)							
Y1	1.135	X	1.370	+			1.555
Y2	1.740	X	1.050	+			1.827
Y3	1.500	X	2.450	+			3.675
Y4	1.210	X	1.990	+			2.408
TOTAL(A)				+			9.465

GROUND COVERAGE AREA OF - A = F. A. R. AREA + NON F. A. R
=115.200 + 2.099 + 9.465
= 126.764 SQMT

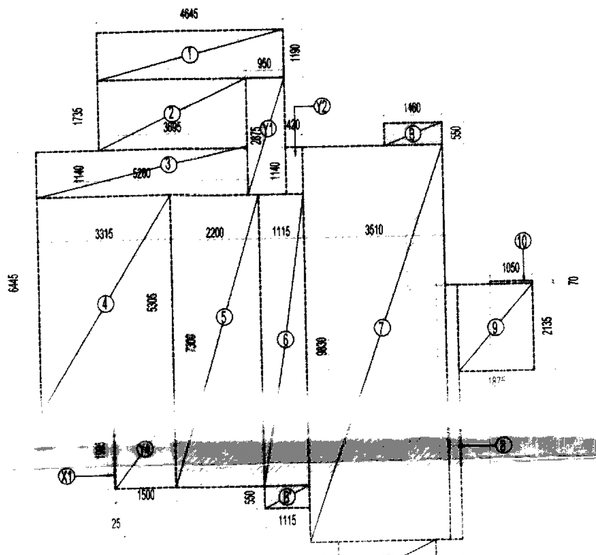

AREA DIAGRAM FOR TYPE -B

F.A.R. COVERED AREA CALCULATION FOR TYPE -B							
S.NO.	PARTICULARS						AREA (SQ.M)
1	4.645	X	1.190	+			5.528
2	3.895	X	1.735	+			6.411
3	5.290	X	1.140	+			5.996
4	3.315	X	5.305	+			17.586
5	2.200	X	7.300	+			16.060
6	1.115	X	7.300	+			8.140
7	3.510	X	9.830	+			34.503
8	0.300	X	6.365	+			1.910
9	1.875	X	2.135	+			4.003
10	1.950	X	0.970	+			0.074
	TOTAL F.A.R AREA OF TYPE - B			+			100.210

F.A.R AREA OF BALCONY (B)= (X1) / 2							
				+	2.099		
				+	2.099		

TOTAL F.A.R AREA FOR TYPE -B = TYPE (B) AREA + BALCONY AREA
= 100.210 + 1.050 = 101.26 SQMT

NON F.A.R AREA OF BALCONY (B)							
Y1	3.950	X	2.875	+			2.731
Y2	3.420	X	1.135	+			0.479
Y3	2.450	X	1.135	+			2.720
Y4	1.500	X	1.990	+			2.990
TOTAL (B)				+			8.922

GROUND COVERAGE AREA OF - B = F. A. R AREA + NON F. A. R
=100.21 + 2.099 + 8.922
= 111.231 SQMT

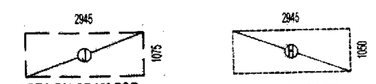

AREA DIAGRAM FOR LOFT AREA UNIT- (A)
AREA CALACULATION
2.945 X 1.075 =3.165 SQMT

AREA DIAGRAM FOR LOFT AREA TYPE- (B)
AREA CALACULATION
2.945 X 1.050 =3.092 SQMT

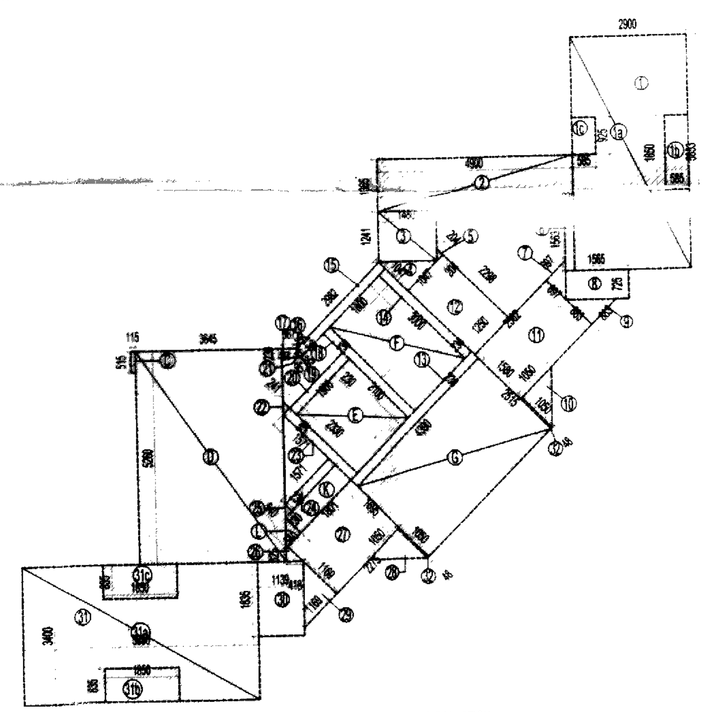

TYPICAL FLOOR AREA DIAGRAM FOR CIRCULATION

F.A.R. COVERED AREA CALCULATION FOR CIRCULATION							
S.NO.	PARTICULARS						AREA(SQ.M)
1							3.384
1a	1.300	X	1.968	+	12.507		
1b	1.147	X	1.850	+	1.062		
1c	0.577	X	0.925	+	0.54		
					1.623		
2	4.300	X	1.365	+			6.686
3	1.480	X	1.241	+			1.837
4	0.5 X 1.047	X	1.047	+			0.548
5							
6	1.147	X		+			
7	0.697	X	0.[illegible]	+			0.[illegible]
8	1.565	X	0.[illegible]	+			1.130
9	0.5 X 0.883	X	0.[illegible]	+			0.390
10	0.5 X 1.090	X	0.[illegible]	+			0.551
11	2.562	X	1.[illegible]	+			4.048
12	1.250	X	2.[illegible]	+			2.875
13	4.390	X	0.[illegible]	+			1.[illegible]
14	0.230	X	3.[illegible]	+			2.690
15	2.963	X	0.[illegible]	+			0.686
16	0.5 X 0.695	X	0.[illegible]	+			0.005
17	0.367	X	0.[illegible]	+			0.064
18	0.230	X	3.[illegible]	+			0.690
19	0.995	X	0.[illegible]	+			0.013
20	1.900	X	0.[illegible]	+			0.437
21	0.5 X 0.095	X	0.[illegible]	+			0.005
22	0.5 X 0.230	X	0.[illegible]	+			0.026
23	0.230	X	2.[illegible]	+			0.536
24	1.571	X	0.[illegible]	+			1.210
25	0.5 X 0.230	X	0.[illegible]	+			0.026
26	0.5 X 0.418	X	0.[illegible]	+			0.115
27	2.275	X	1.[illegible]	+			3.956
28	0.5 X 1.050	X	1.050	+			0.551
29	0.5 X 1.189	X	1.[illegible]	+			0.663
30	1.139	X	1.[illegible]	+			2.090
31	3.14x3.14x3.14			+			15.[illegible]
31a	5.660	X	3.[illegible]	+	19.[illegible]		
31b	1.850	X	0.835	+	1.545		
31c	1.850	X	0.835	+	1.545		
					3.090		
32	2 X 0.048	X	1.250	+			0.101
TOTAL F.A.R AREA OF CIRCULATION				+			48.302

AREA CALCULATION TOWARDS 15% ADDITIONAL F.A.R FOR TYPICAL FLOOR							
A.NO.	PARTICULARS						AREA (SQ.M)
[illegible]							
E	4 X 1.115	X	0.550	+			2.453
FIRE STAIRECASE AREA							
C	2.115	X	0.515	+			0.059
C1	3.645	X	5.260	+			19.173
LIFT WELL							
E	1.900	X	2.100	+			3.990
F	1.600	X	3.000	+			5.400
LIFT LOBBY							
G	4.390	X	2.515	+			11.041
LOFT AREA							
H	4 X 2.945	X	1.050	+			12.369
I	2 X 2.945	X	1.075	+			6.332
ELE SHAFT							
31b	1 X 1.850	X	0.835	+			1.545
31c	1 X 0.835	X	1.850	+			1.545
FHC SHAFT							
31c	1 X 0.835	X	1.850	+			1.545
1c	1 X 0.585	X	0.925	+			0.541
L.V SHAFT							
K	1.801	X	0.540	+			0.973
L	0.55 X 0.540	X	0.540	+			0.315
TOTAL AREA							71.797

PLUMBING LEGEND	
1	100Ø SOIL & VENT PIPE
2	100Ø WASTE & VENT PIPE
3	150Ø RAIN WATER PIPE
4	COLD WATER SUPPLY DN TAKE
5	50 Ø CWS RISER PIPE TO O.H. TANK
6	75 Ø RAIN WATER PIPE
FD	FLOOR DRAIN(WITH GRATING)
FT	FLOOR TRAP (100 x 75mm WITH GRATING)
BD	BALCONY DRAIN(WITH GRATING)
WB TO FT	32Ø WASTE PIPE
FD TO FT	50Ø WASTE PIPE
FT TO VERTICAL STACK	75Ø WASTE PIPE
WC TO VERTICAL STACK	100Ø SOIL PIPE

SCHEDULE OF OPENINGS

S.NO.	TYPE	WIDTH	HEIGHT	CILL	LINTEL	REMARKS
1.	DW1	2700	2500	0/300	2500	LIVING ROOM/ DINING ROOM
2.	DW2	2200	2500	0/300	2500	BEDROOM
3.	DW3	1875	2500	0/300	2500	BEDROOM
4.	DW4	1550	2500	0/1000	2500	KITCHEN
5.	D1	1000	2100	-	2500	ENTRANCE
6.	D2	1000	2100	-	2100	BEDROOM
7.	D3	900	2100	-	2100	KITCHEN
8.	D4	800	2100	-	2100	TOILET
9.	D5	1200	2100	-	2100	STAIRCASE
10.	D6	750	2500	-	2500	SERVANT ROOM
11.	D7	600	2500	-	2500	TOILET
12.	W1	1700	1450	1050	2100	MAIN STAIRCASE
14.	W2	2200	1450	1050	2100	FIRE STAIRCASE
14.	W3	800	2200	0/300	2300	POOJA ISTORE
15.	W4	2800	2200	0/300	2500	BEDROOM
16.	W5	1400	2200	0/300	2500	BEDROOM
17.	W6	1200	2200	0/300	2500	BEDROOM
18.	W7	950	2200	0/300	2500	BEDROOM
19.	FD1	900	2500	-	2500	FIRE RATED DOOR
20.	V1	800	1000	1200	2200	GLAZED VENTILATOR

NORTH POINT

This drawing is a "COPYRIGHT" contents of this drawing or part thereof may not be used or reproduced without the permission of the Architect

NO. OF PRINTS	DATE	ISSUED TO	REMARKS
	DATE		

Greater Noida Industrial Dev. Authority
APPROVED
Vide Letter No. 3098 Dated 6/4/2017
Valid upto Dated 9/1/8/2018
DGM (Plng. & Arch.) — Gen. Manager (Plng. & Arch.)
Drawing Checked & Verified By
Dy D'man — Sr. Ex. (Plan)

Revalidation
Greater Noida Industrial Dev. Authority
APPROVED
Vide Letter No. 2022 Dated 11/11/2021
Valid upto Dated ...
Gen. Manager (Plng. & Arch.)
Drawing Checked & Verified By
Dy D'man — Sr. Ex. (Plan)

OWNER SIGN — Earthcon Universal Infratech Pvt. Ltd. — Director

ARCHITECT SIGN — VISHAL SHARMA, ARCHITECT CA-98/23261, 9310154866, NEW DELHI

OWNER

M/S EARTHCON UNIVERSAL INFRATECH PVT LTD

SUBMISSION DRAWING

PROJECT

PROPOSED GROUP HOUSING FOR
M/S EARTHCON UNIVERSAL INFRATECH PVT. LTD.
AT PLOT NO. GH-10, SEC-01, GREATER NOIDA, U.P

DATE	PROJECT INCHARGE	CHECKED BY
30-12-2010	DEVESH SHAKYA	DEVESH SHAKYA
SCALE	DRAWN BY	APPROVED BY
1:100	RSR	VISHAL SHARMA

DRAWING TITLE

TOWER-A

1st TO 8th FLOOR PLAN

ARCHITECTS:-
Confluence Consultancy Services
E-406, LOWER GROUND, G.K. II, NEW DELHI
PH: +91-11-29216006, FAX NO. 011-2916006
E-MAIL : ccs@inconfluence .com, confluenceindia@gmail.com
Web site : www.inconfluence.com
ISO 9001: 2000

DRAWING NO. — REVISION R-0