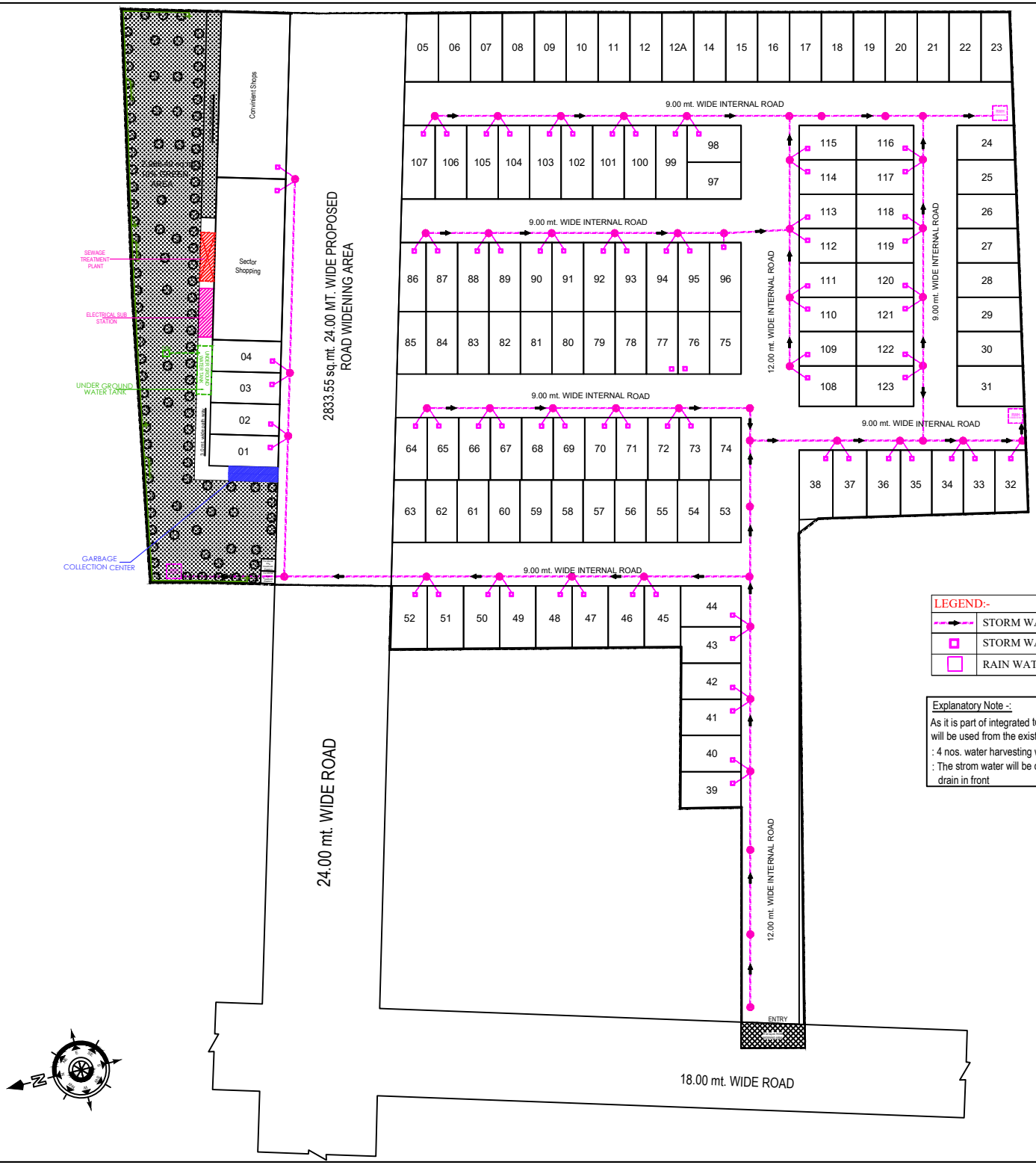

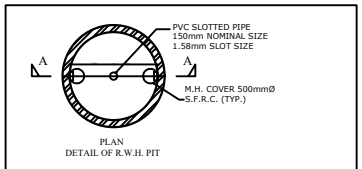

Rain Water Storage Tank Detail

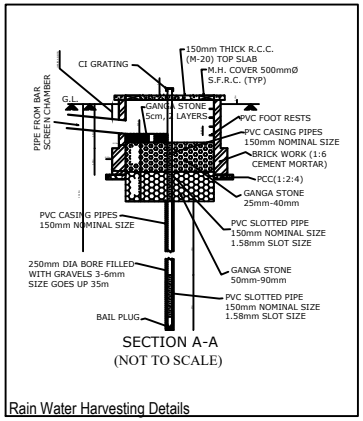

Rain Water Harvesting Details

LEGEND:-	
	STORM WATER LINE
	STORM WATER CATCH BASIN
	RAIN WATER HARVESTING PIT

Explanatory Note -:

As it is part of integrated township so following services will be used from the existing / already planned same -

: 4 nos. water harvesting will be planned in this pocket.

: The strom water will be discharge in existing drain in front

PROJECT:

SUBMISSION DRAWING FOR THE PROPOSED RESIDENTIAL LAYOUT PLAN (AFFORDABLE HOUSING UNDER POLICY 2021 (AHP 2021) AT KHASRA NO. - 1082m , 1090 & 1089m AT MORTA GHAZIABAD (U.P.)

DEVELOPER -:

M/s - SHARDA GARMENTS PVT. LTD. &
M/s - ASHRAY INFO SOLUTIONS PVT. LTD.

DRAWING TITLE :

WASTE DISPOSAL PLAN
(RAIN WATER HARVESTING / STROM WATER PLAN)

DEVELOPER'S | ARCHITECTS SIGN.

Design Studio
ANUJ AGARWAL ARCHITECTS
OFFICE:- A-244 KAUSHAMBI GHAZIABAD (U.P.)
Ph:-0120 - 4165716 , 4563716 , 6454182
e-mail : arch.anujagarwal@gmail.com

SCALE	DEALT BY	DATE
DESIGN BY	CHECKED BY	DRG. No.