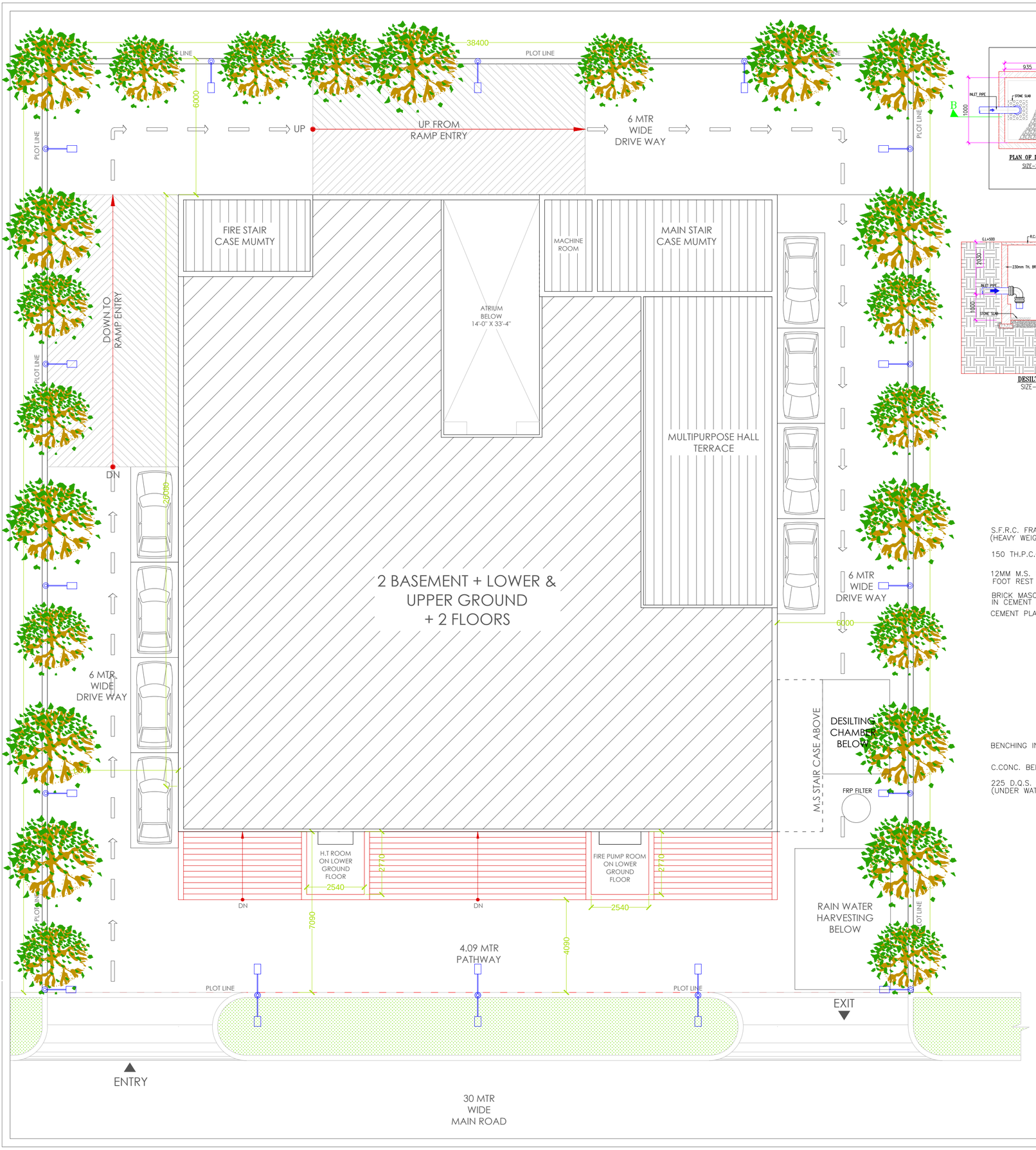

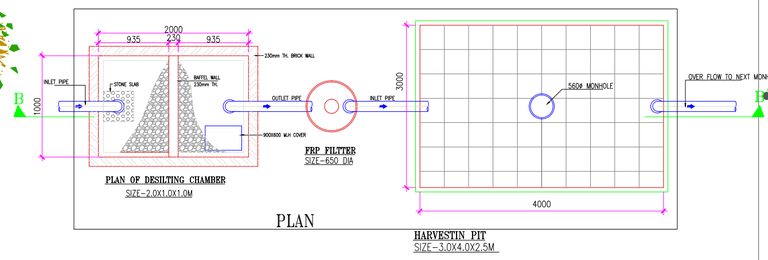

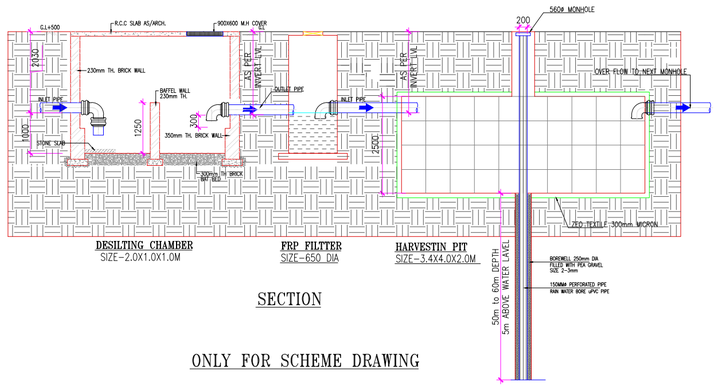

ONLY FOR SCHEME DRAWING

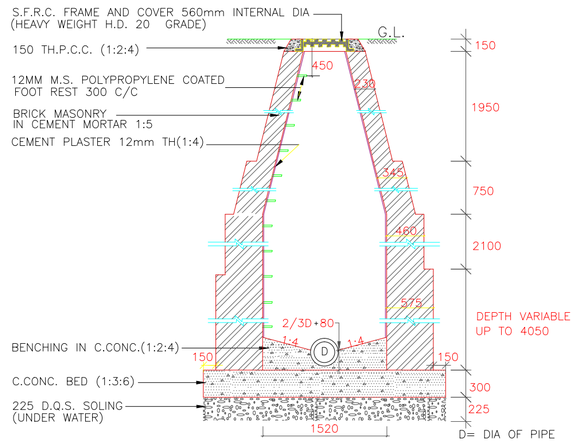

SECTION C-C

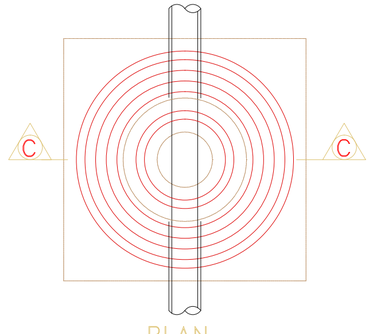

PLAN

MANHOLE 1520 DIA

NOTES

- THIS DRAWING IS THE PROPERTY OF UPAAY DESIGN & PLANNING AND IS NOT TO BE USED FOR ANY PURPOSE OTHER THAN FOR WHICH IT IS ISSUED WITHOUT PERMISSION OF ITS PRINCIPALS.
- THIS DRAWING IS TO BE READ IN CONJUNCTION WITH OTHER RELEVANT ARCHITECTURAL, STRUCTURAL AND OTHER SERVICES/ CONSULTANTS DRAWING. IT SHALL BE THE DEEMED RESPONSIBILITY OF THE CONTRACTOR/ FABRICATOR TO BRING IN TO NOTICE OF ARCHITECTS IF ANY DISCREPANCY WITHIN OR BETWEEN THE DRAWINGS PRIOR TO CONSTRUCTION.
- ALL WRITTEN DIMENSIONS ARE TO BE FOLLOWED AND THE DRAWING IS NOT TO BE SCALED.

COPY	REV.	DATE	DESCRIPTION
MAIL	R-0	18-10-24	G.F.C

KEY PLAN

ORIENTATION

BUILDER & PROMOTER

GOPI PICTURES LLP

ARCHITECT

UPAAY DESIGN & PLANNING

PROJECT

PROPOSED COMMERCIAL CUM CINEMA HALL
AT KHASRA NO. 2852, 2854, KHEKRA, BAGHPAT

DRAWING TITLE

EXTERNAL DEVELOPMENT PLAN
BUILDING HEIGHT
(2BASEMENT+LOWER + UPPER + 3 FLOORS)

SCALE	DATE	DRAWN BY
NOT TO SCALE	18-10-2024	RHYTHM
CHECKED BY	APPROVED BY	
ASHISH	ASHISH	

DRG.NO.