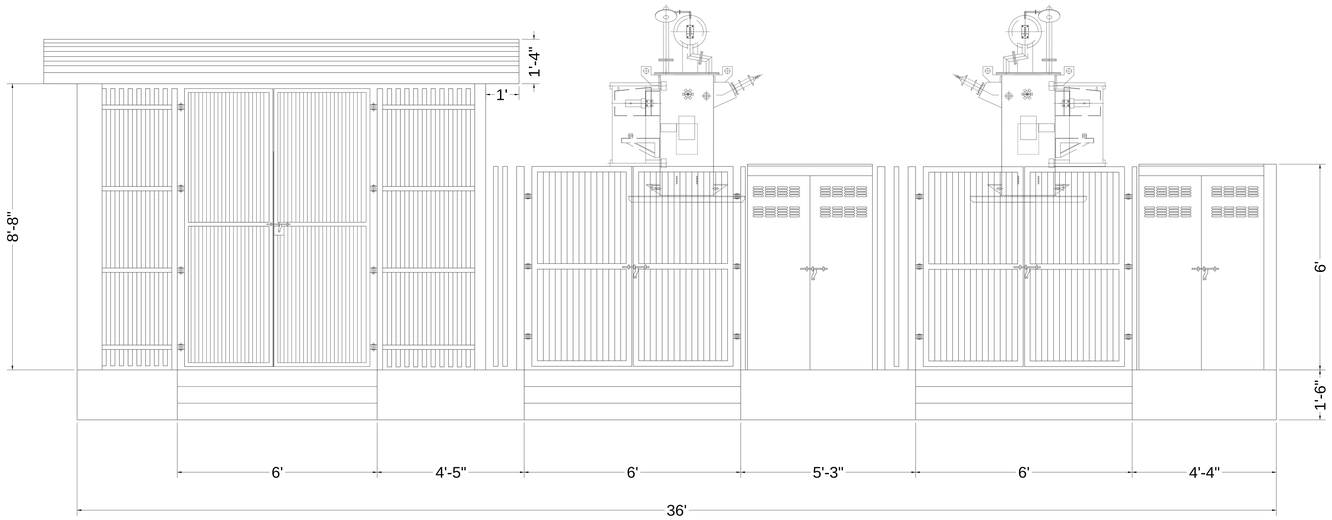

FRONT ELEVATION

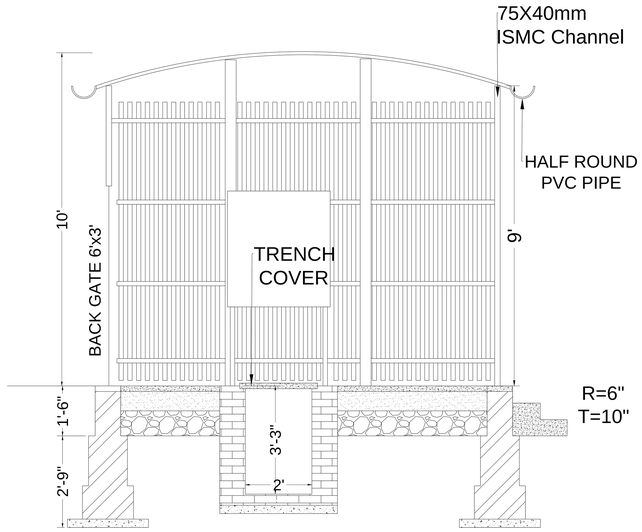

SECTION AT A-A'

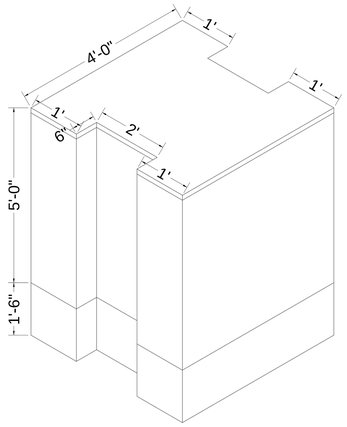

ISOMETRIC VIEW OF TR. PLINTH

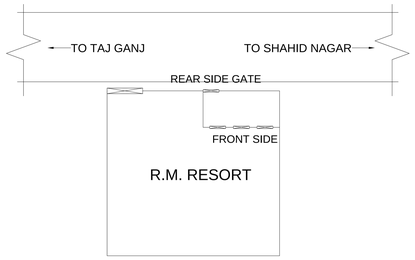

KEY PLAN

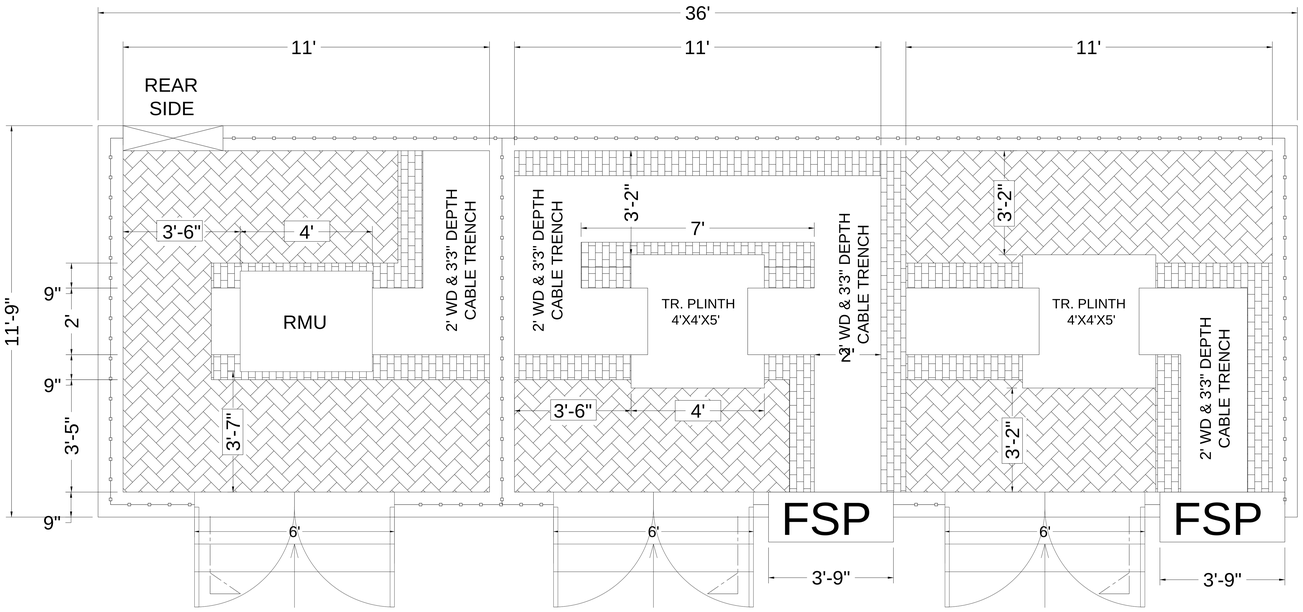

PLAN

FRONT SIDE

torrent POWER TORRENT POWER LIMITED

DRG NO.

TPL/AGRA/NP/16-17/39

Proposed Layout of 11kv s/s For
R.M. RESORT Agra

RG SUMAN	N.P		K.B SINGH	IN feet	28/09/2016
DRN BY	SECTION	CHECKED BY	APPROVED BY	DIMENSION	DATE