PRODUCED BY AN AUTODESK EDUCATIONAL PRODUCT

SEWAGE TREATEMENT PLAN

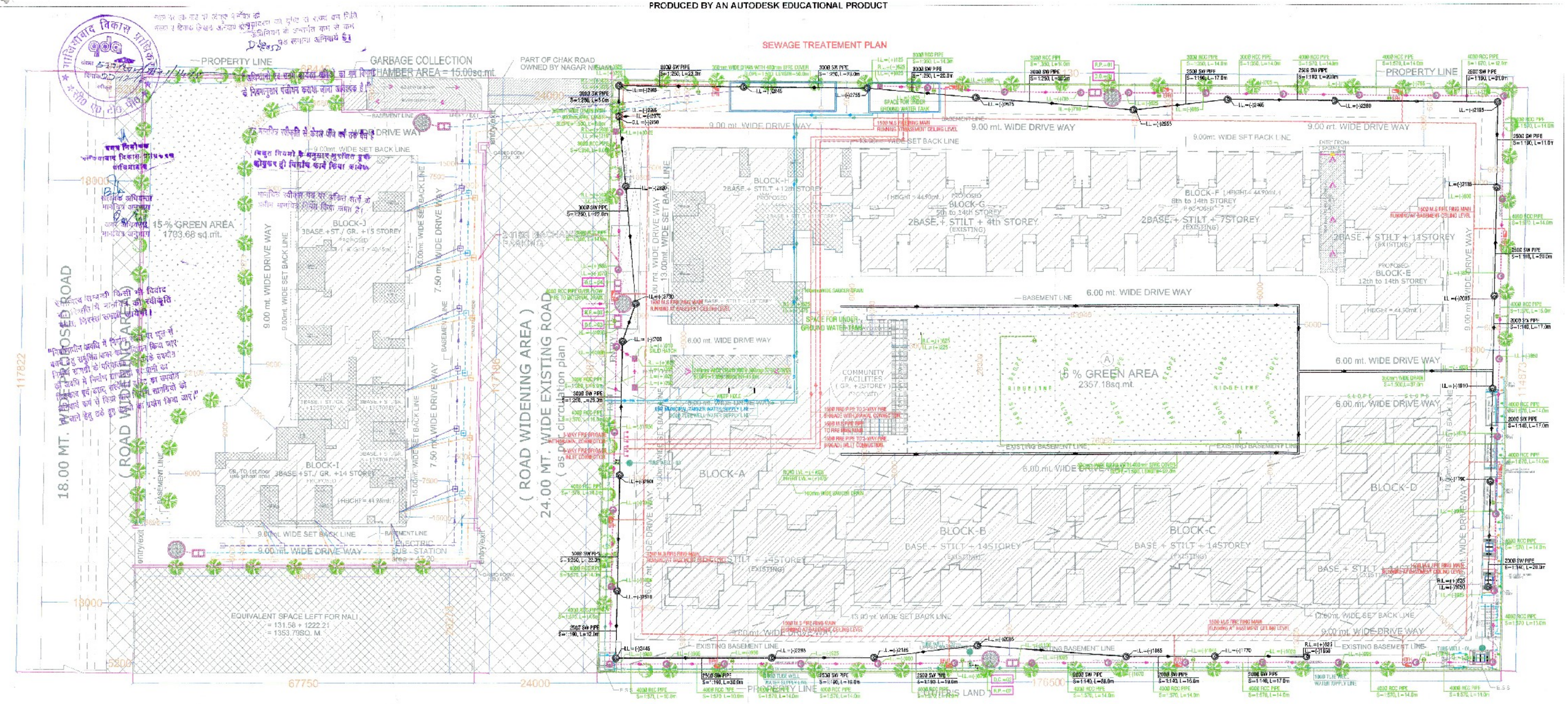

SERVICES PLAN

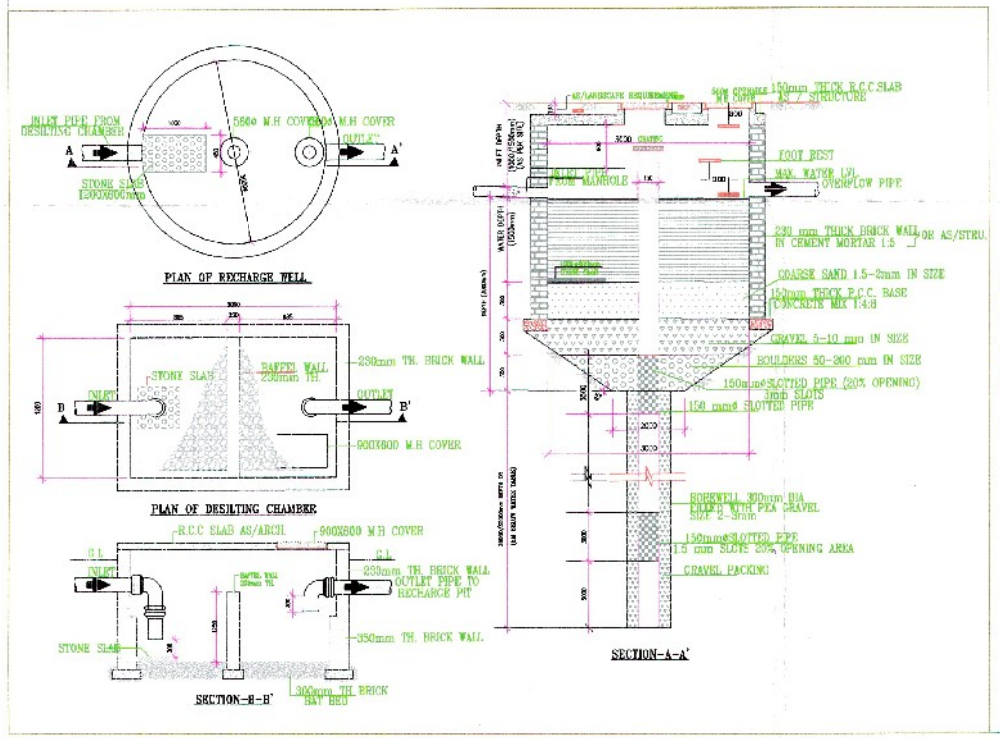

SERVICES LINE DETAIL

1. 450 WD. STORM WATER DRAIN
2. 150 Ø WASTE WATER LINE
3. 450 Ø SEWER LINE
4. 300 Ø RAIN WATER LINE

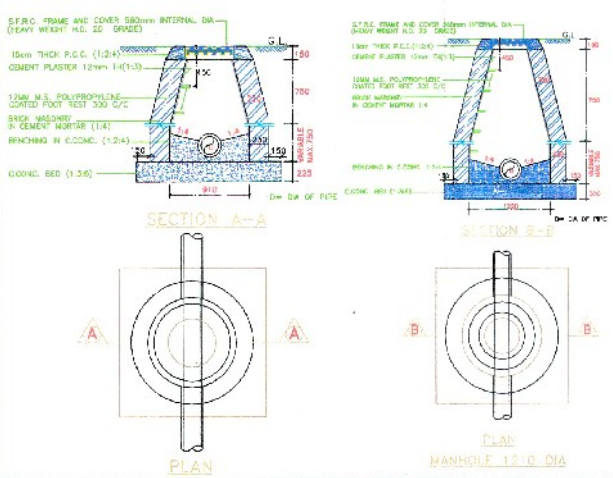

PLUMBING LEGEND:-

- EXTERNAL SEWER LINE
- EXTERNAL STORM WATER LINE
- MW — DOMESTIC WATER SUPPLY FILLING LINE FROM MUNICIPAL / TANKER LINE.
- IRRIGATION WATER SUPPLY LINE
- TW — TUBE WELL WATER SUPPLY LINE
- EXTERNAL FIRE HYDRANT LINE
- R.P. — RECHARGE PIT (3000 MM DIA)
- D.C. — DESILTING CHAMBER (1000 x 2000 MM DIA)
- VALVE WITH CHAMBER
- NON RETURN VALVE WITH CHAMBER

PLUMBING LEGEND:-

- SEWER MANHOLE WITH 560Ø MANHOLE COVER.
- RAIN WATER HARVESTING
- STORM WATER CATCH BASIN SIZE = (600x600)MM
- STORM WATER MANHOLE WITH 560Ø PERFORATED MANHOLE COVER.
- (I) 910 DIA MANHOLE UPTO 1.67 M DEPTH
- (II) 1220 DIA MANHOLE UPTO 2.29 M DEPTH
- (III) 1520 DIA MANHOLE ABOVE 2.29 M DEPTH
- EFH — EXTERNAL FIRE HYDRANT
- GH — GARDEN HYDRANT
- G.L. — GROUND LEVEL
- I.L. — INVERT LEVEL
- C.L. — CONNECTION LEVEL

PROJECT:
REVISED SUBMISSION DRAWINGS FOR GROUP HOUSING " FORTUNE RESIDENCY"
AT KHASRA NO.-1123 &1118
AT VILLAGE NOORNAGAR GHAZIABAD (UP)

OWNER:
M/s. VASUTI INFRASTRUCTURE (P.) LTD

DRAWING TITLE:
SERVICES PLAN

OWNER SIGN. | ARCHITECT SIGN.

V.D. SUARI
ARCHITECTS
OPTIMUM DESIGN PVT. LTD.
B-24, SEC-67, NOIDA

Aashirwad Architectural Services Pvt. Ltd.
Architects, Engineers, Interior Designers, Vastu Consultant
Office: 5/1, FLAT NO.5, ROOP NAGAR, DELHI-110007
Phone: 087-360765, 09-0770101
Email:- aashirwadarchitects@yahoo.com

SCALE	DATE	DRAWN BY	CHECKED BY	SHEET NO.
N.T.S				SD-04a

PRODUCED BY AN AUTODESK EDUCATIONAL PRODUCT
PRODUCED BY AN AUTODESK EDUCATIONAL PRODUCT
PRODUCED BY AN AUTODESK EDUCATIONAL PRODUCT