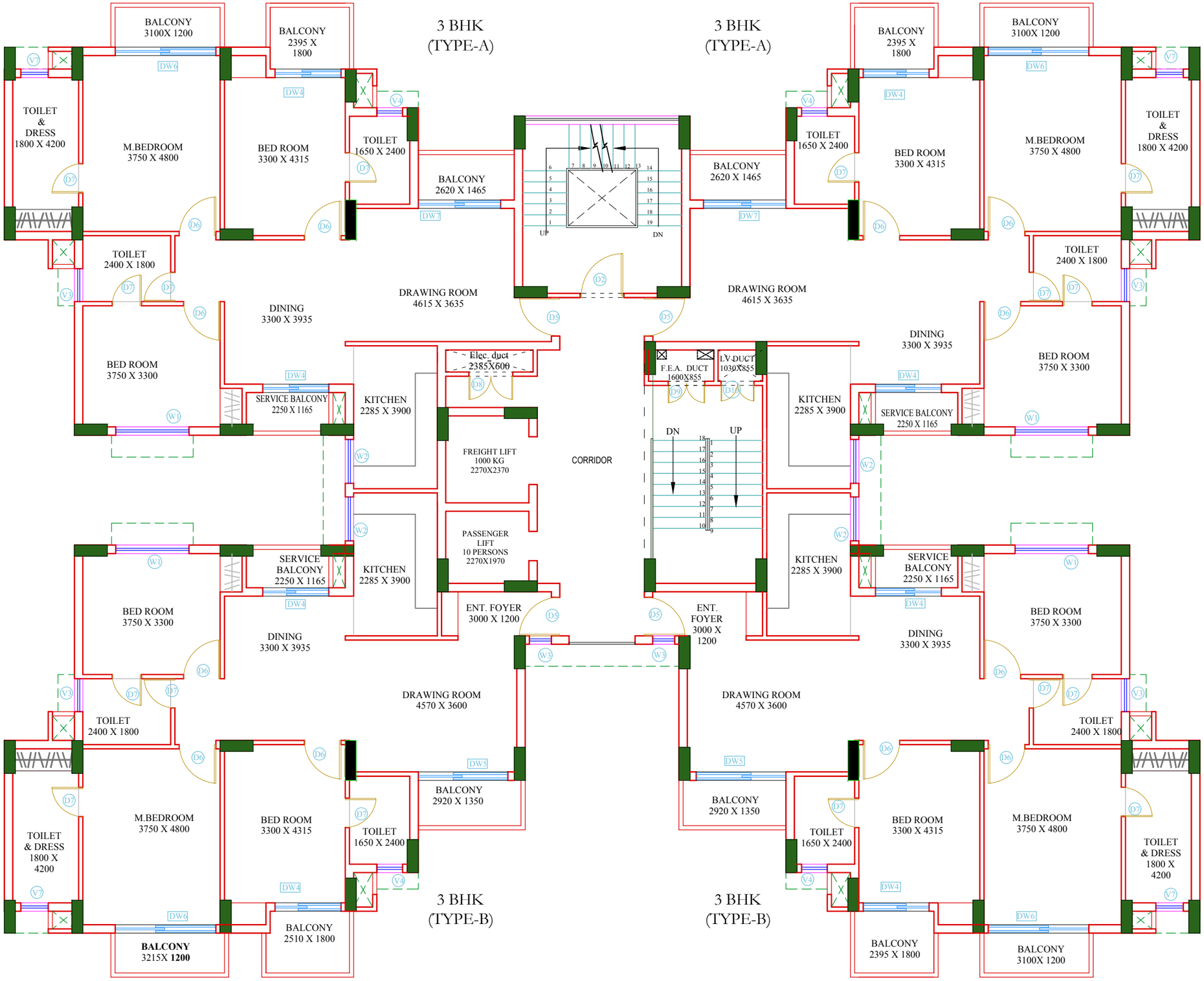

PROJECT-
GROUP HOUSING AT
MADHUBAN - BAPUDHAM YOJNA,
GHAZIABAD

LOCATION -
MADHUBAN - BAPUDHAM YOJNA
GHAZIABAD

CLIENT -
GHAZIABAD DEVELOPMENT AUTHORITY

DRAWING TITLE
TYPICAL FLOOR PLAN
3-BHK

SCALE-
NTS

FLAT NO.

DATE
JULY -2017

Anupam Mittal
Shubhra Mittal

1st Floor Akash II,
31, Gokhle Marg,
Lucknow-226001 U.P. (INDIA)
Ph.: +91 522-3012069 ,3925099
Fax: +91 522-2209800
e-mail : admin@arinem.co.in

B-IV/69 A,
Safdarjung Enclave
New Delhi-110029(INDIA)
Ph.: 011-41525299
e-mail : delhi@arinem.co.in

ARCHITECTURE
INTERIORS
INFRASTRUCTURE
ENGINEERING
MANAGEMENT

ARINEM
CONSULTANCY SERVICES PVT. LTD.