24 M WIDE SECTOR ROAD

SECTION -1 DETAILS

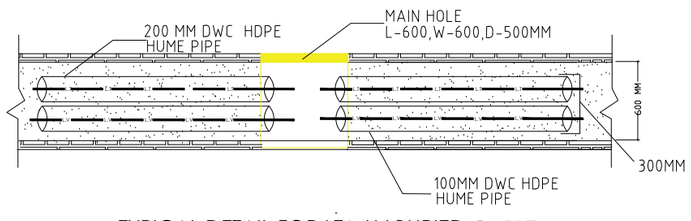

TYPICAL DETAIL FOR LT& LV BURIED CABLE
SEC-1(A,B,C,D,E) TOP VIEW

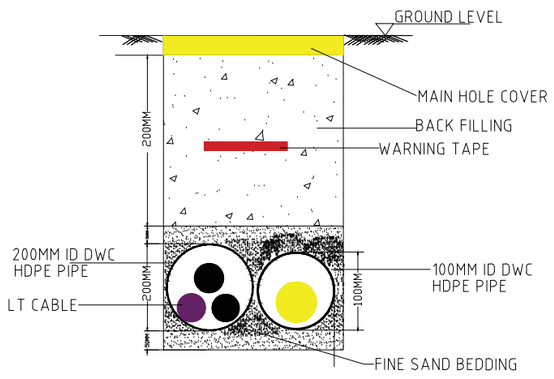

TYPICAL DETAIL FOR LT BURIED CABLE
SEC-1(A,B,C,D,E) FRONT VIEW

SECTION -2 & 3 DETAILS

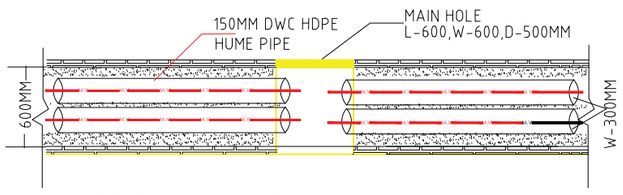

TYPICAL DETAIL FOR MV BURIED CABLE
SEC. -2 & 3 (A&B) TOP VIEW

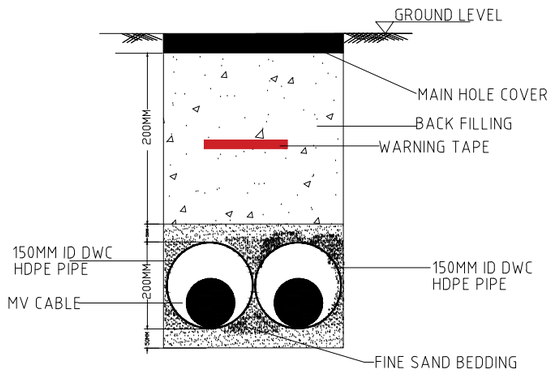

TYPICAL DETAIL FOR MV BURIED CABLE
SEC. -2 & 3 (A&B) FRONT VIEW

SECTION -4 DETAILS

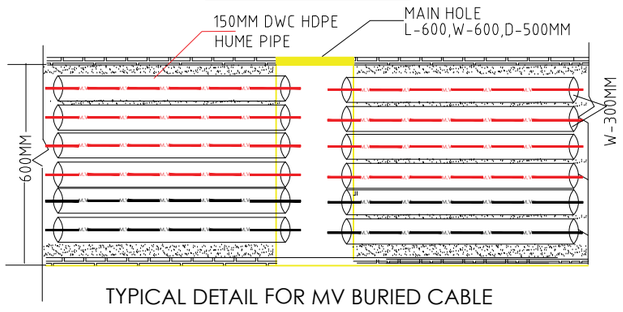

TYPICAL DETAIL FOR MV BURIED CABLE
SEC. -4 TOP VIEW

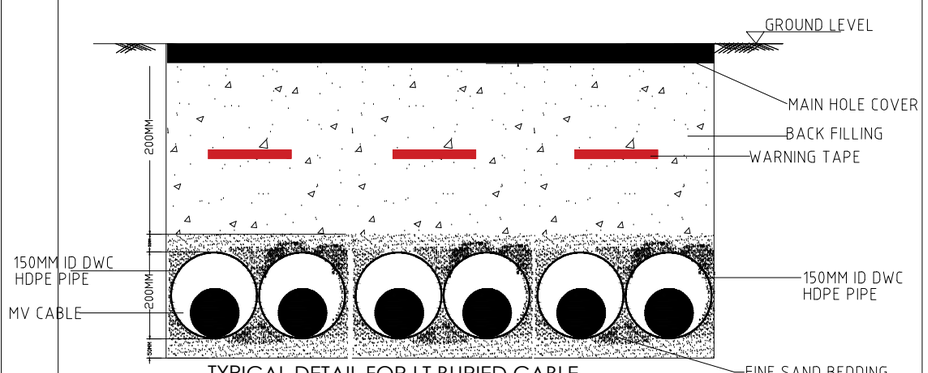

TYPICAL DETAIL FOR LT BURIED CABLE
SEC-4 FRONT VIEW

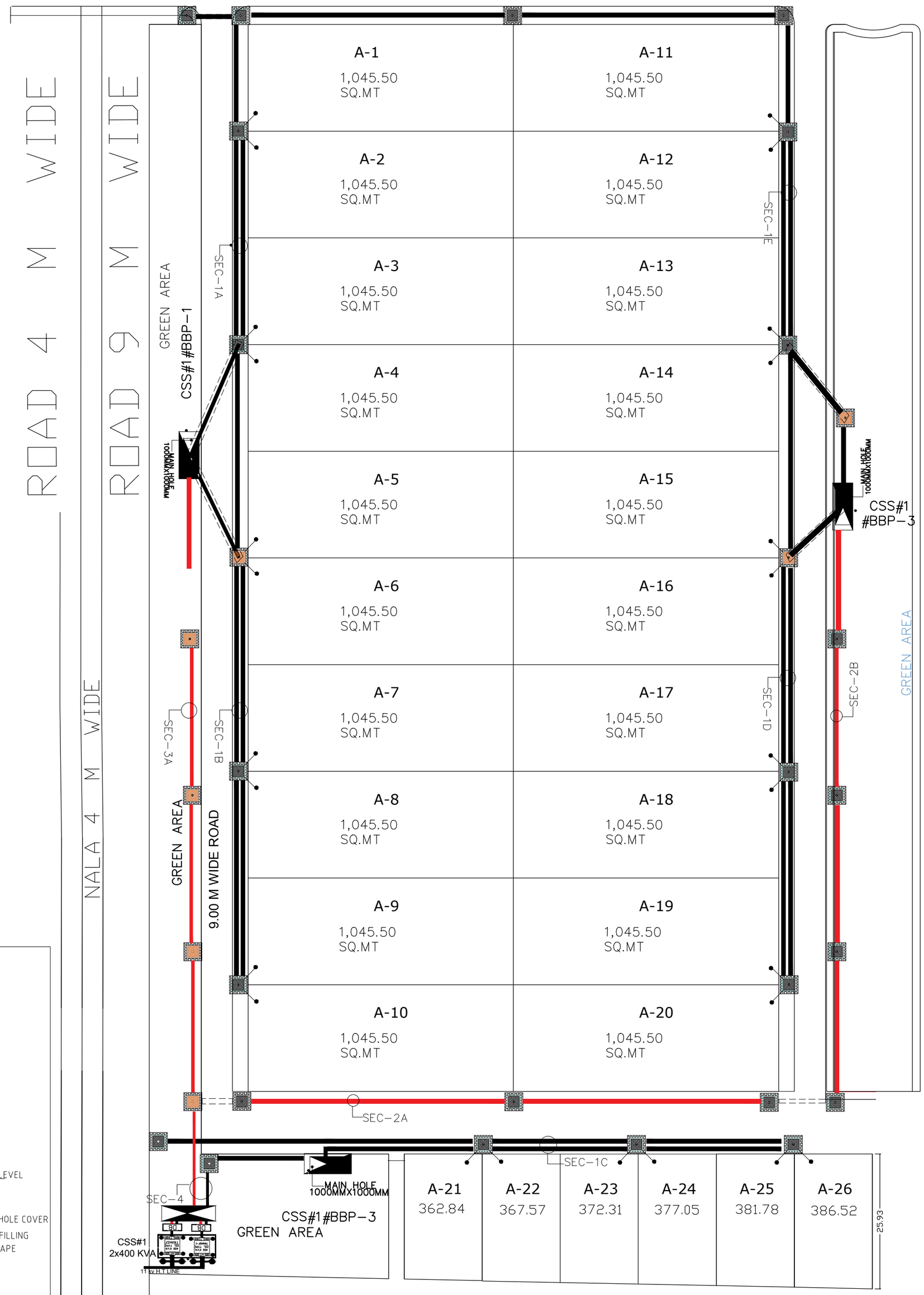

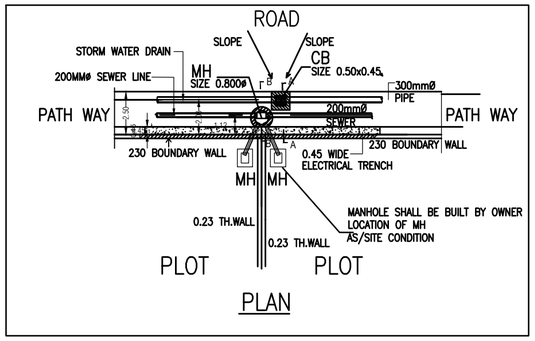

PLAN

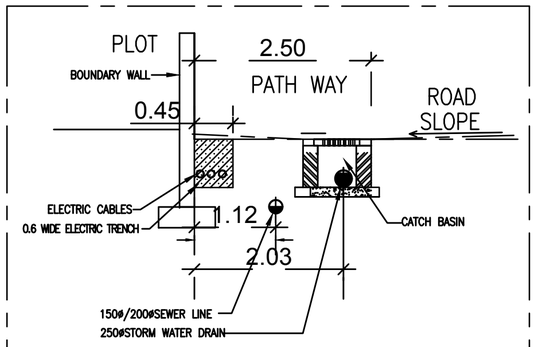

SECTION A-A

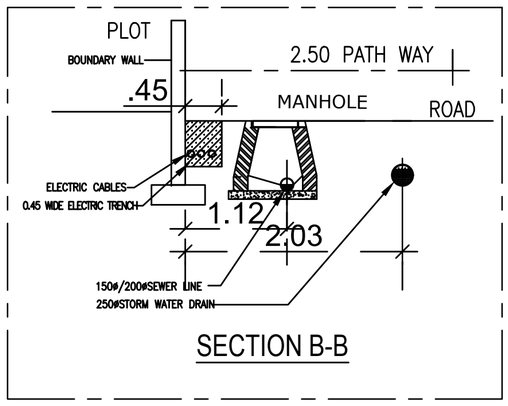

SECTION B-B

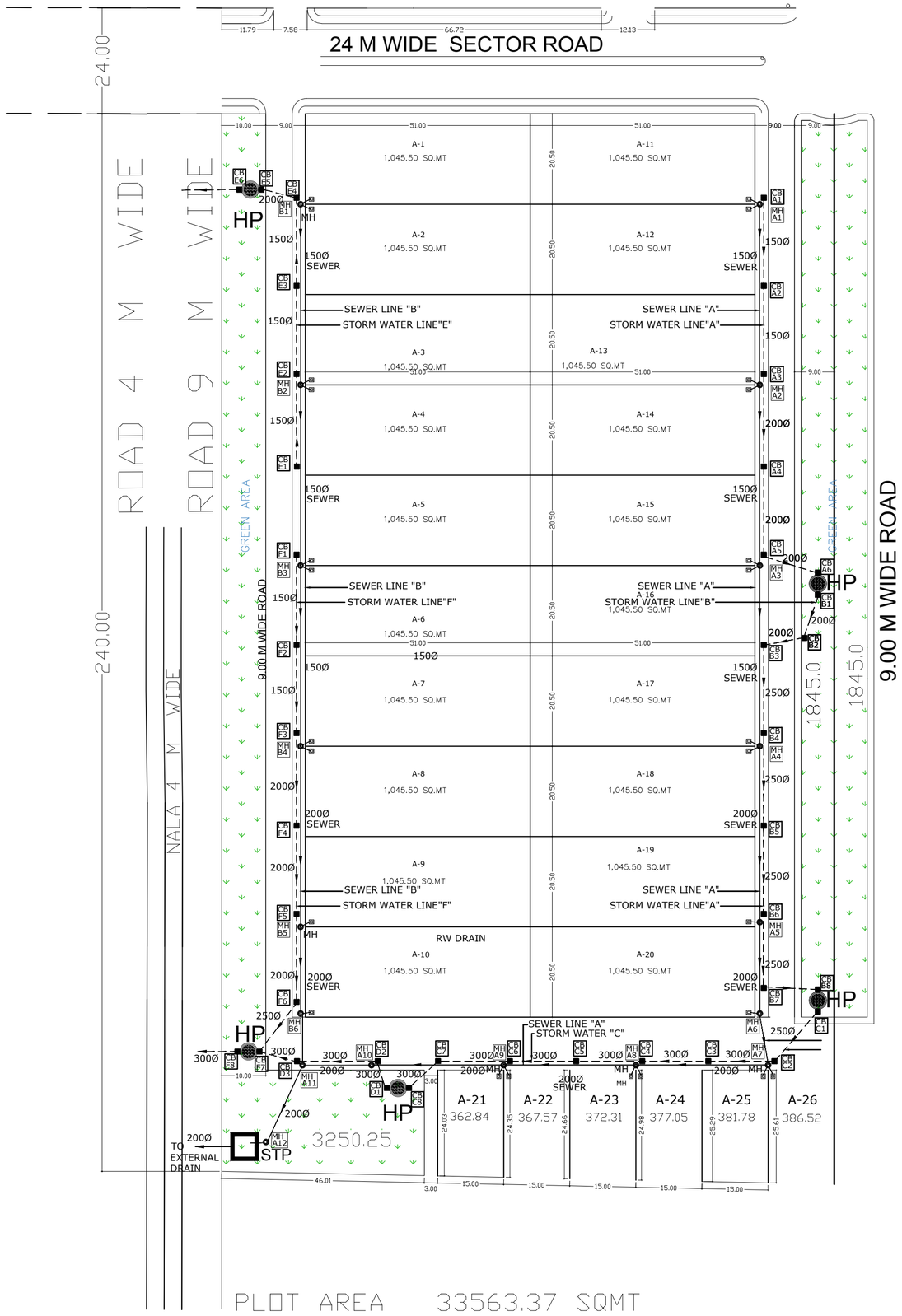

PLOT AREA 33563.37 SQMT