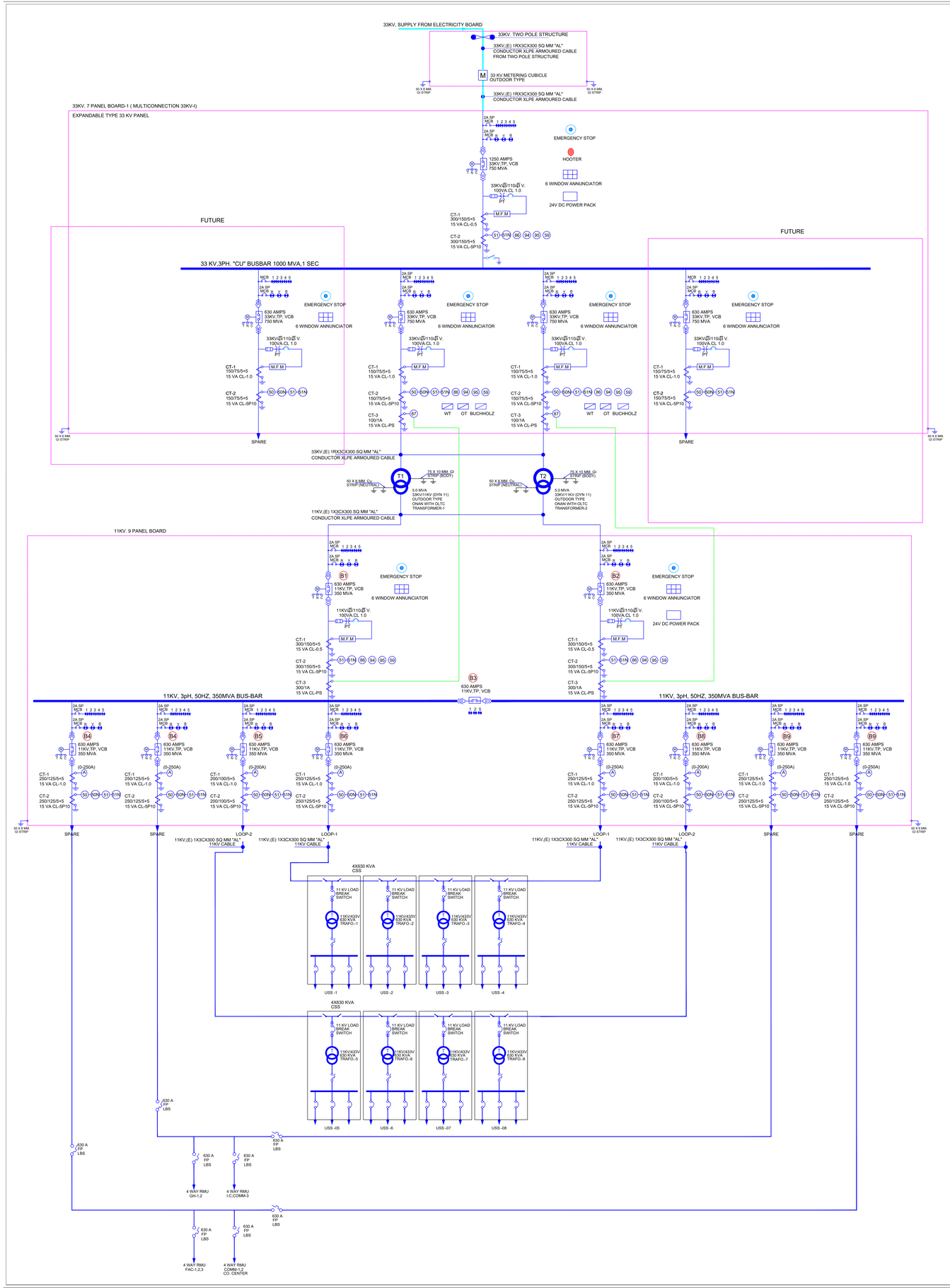

PROJECT TITLE :-

PROPOSED TOWNSHIP AT FIROZPUR UPERHAR LUCKNOW ROAD,AYODHYA

DRG. TITLE :-

SLD

NOTES :

1. ALL DIMENSIONS ARE IN Mtr., UNLESS OTHERWISE SPECIFIED.
2. DRAWINGS SHALL NOT BE MEASURED, ONLY WRITTEN DIMENSIONS ARE TO BE FOLLOWED.
3. ALL THE DIMENSIONS SHOULD BE CHECKED AND VERIFIED BEFORE EXECUTION, INCONSISTENCY, IF ANY SHOULD BE BROUGHT TO THE NOTICE OF THE ARCHITECT IMMEDIATELY.
4. THIS DRAWING SHALL BE READ IN CONJUCTION WITH THE OTHER RELEVANT DRAWINGS.
5. KINDLY REFER DRAWING NO. "N-01" FOR DETAILED NOTES.

ARCHITECT :

ARVIND GUPTA

AGENCY:-

AYODHYA DEVELOPMENT AUTHORITY

DRG. NO. :-

VIZ/SLD/01/23

DATE :-

17-11-2023

DESIGN BY :-

Er.AJEET KUMAR

DRAFT BY:-

DEVENDRA DWIVEDI

NORTH :-

SCALE:-

N.T.S.

CONSULTANTS :

STUDIO GREEN

U.P. U.K. NCR

STUDIO GREEN CONSULTANTS PVT. LTD.

C- 1233 ARAWALI MARG , INDIRA NAGAR ,

LUCKNOW - 226 016.

PH. 94150 02383

EMAIL: architects@studiogreen360.com

Services Consultants :-

BUILDING MEP CONSULTANT

VIZICON

A/100 Sector-A Indira Nagar Near Bhootnath Metro Station