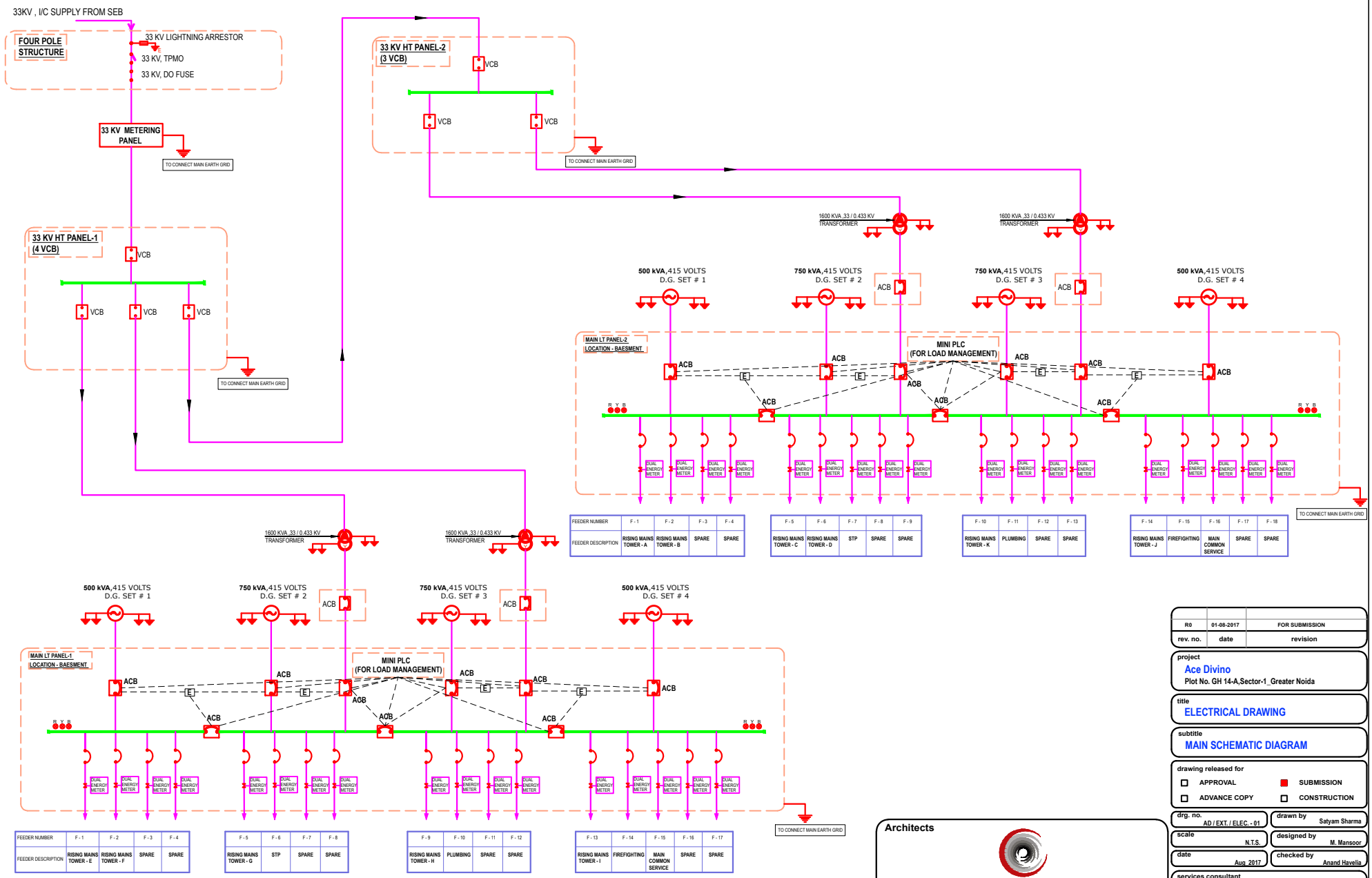

rev. no.	date	revision
R0	01-08-2017	FOR SUBMISSION

project
Ace Divino
Plot No. GH 14-A,Sector-1_Greater Noida

title
ELECTRICAL DRAWING

subtitle
MAIN SCHEMATIC DIAGRAM

drawing released for
- ☐ APPROVAL
- ☐ ADVANCE COPY
- ■ SUBMISSION
- ☐ CONSTRUCTION

drg. no. AD / EXT. / ELEC. - 01	drawn by Satyam Sharma
scale N.T.S.	designed by M. Mansoor
date Aug 2017	checked by Anand Havelia

Architects

Confluence

S- 29, GK-2 N.D-48,INDIA architecture
Ph- +91-11-29216006 Ph- +91-11-40564768 urban design
ccs@inconfluence.com www.inconfluence.com hospitality
Member of IGBC ISO - 9001 : 2000 interiors

services consultant
Consummate Engineering Services (P) Ltd.
Noida Office : B - 67, Sector - 67, Noida - 201 301
Tel : (0120) 2593500 (30 Lines)
Lko. Office : R 006, Rohtas Plumeria, Gomti Nagar, Lucknow
Tel : (0522) 6515455
e mail : mail@cespl.in, website : www.cespl.in