AREA STATEMENT FOR PROPOSED TOWER T9

1. PROPOSED COVERED AREA ON GROUND FLOOR = 734.102 SQMT
2. PROPOSED COVERED AREA OF LOWER BASEMENT = 3687.359 SQMT
3. PROPOSED COVERED AREA OF UPPER BASEMENT = 3687.359 SQMT
4. PROPOSED COVERED AREA ON ALL FLOORS (INCLUDING BASEMENTS) =21751.291 SQMT
5. PROPOSED COVERED AREA ON ALL FLOORS AS/FAR = 13642.291 SQMT
6. PROPOSED COMMERCIAL ON GROUND FLOOR = 136.082 SQMT

AREA STATEMENT OF NON FAR (5%)

MAXIMUM PERMISSIBLE NON-FAR AREA (5% OF 64111.515) = 3205.57 SQMT.
TOTAL AREA OF SERVICE DUCTS SHAFTS CUPBOARD LIFT LOBBY ETC. ON ALL FLOORS = 822.344 SQMT.
COVERED AREA OF COMMUNITY BUILDING = 1318.130 SQMT.
COVERED AREA OF MUMTY MACHINE ROOM = 101.541 SQMT.
TOTAL NON FAR = 2242.015 SQMT.(3.49%)
Total Area in F.A.R = 15884.48+4310

PROPOSED PARKING DETAIL:-

1. REQUIRED PARKING @1.5 ECS/100SQMT OF FAR =205 ECS
13642.291/100 X 1.5 = 204.63 = SAY 205 ECS
2. PROPOSED PARKING = =293 ECS
PARKING IN LOWER BASEMENT = 3327.09/32 = 103.97 = 104 ECS
PARKING IN UPPER BASEMENT = 3327.09/32 = 103.97 = 104 ECS
PARKING IN OPEN = 2013.99/23 = 87.56 = 87 ECS
TOTAL = 103+103+90 = 293 ECS
3. DETAIL OF OPEN PARKING AREA =2013.99 SQMT
P1-15.00X13.00 =195.00 SQMT
P2-40.00X14.631 =585.240 SQMT
P3-5.50X10.00 =55.00 SQMT
P4-11.50X65.00 =747.50 SQMT.
P5-10.00X11.50 =115.00 SQMT.
P6-27.50X11.50 =316.25 SQMT
TOTAL =2013.99 SQMT.

DETAIL OF PARKING (EXISTING)

REQUIRED PARKING = 669 ECS.
TOTAL NO. OF FLAT = 560
AREA LESS THEN 80 SQM = 124x1 = 124
AREA MORE THEN 80 SQM = 545x1.25 = 681.25

PARKING:-

TOTAL PARKING = 747 NOs.
644+480+203
IN STILTS = 1802.278/28 = 64 NOs.
IN BASEMENT = 15357.148/32 = 480 NOs.
IN OPEN = 4670.72/23 = 203 NOs.
P1) 150.000 X 5.500 = 825.000
P2) 100.200 X 11.500 = 1102.860
P3) 52.500 X 5.500 = 288.750
P4) 72.500 X 5.500 = 398.750
P6) 55.000 X 11.500 = 302.500
P7) 110.000 X 5.500 = 1189.110
P8) 35.000 X 5.500 = 192.500
P9) 15.000 X 5.500 = 82.500
P10) 25.00 X 5.500 = 137.500
P11) 7.500 X 5.500 = 41.250
P12) 10.000 X 5.500 = 55.000
P13) 10.000 X 5.500 = 55.000
TOTAL OF PARKING = 4670.72 SQM

GREEN AREA DETAIL

REQUIRED GREEN AREA @15% OF NET PLOT AREA-4338.381 SQMT.
28922.54 X 15/100=4338.381 SQMT.
PROPOSED GREEN AREA = 5058.643 SQMT.

G1) 20.439x40.125 = 820.114 SQ.M
G2) 19.550x29.475 = 568.572 SQ.M
G3) 18.885x22.466 = 374.845 SQ.M
G4) 29.850x39.652 = 1183.612 SQ.M
G5) 108.126X19.528 = 2111.50 SQ.M
TOTAL = 5058.643 SQ.M

TOTAL PLOT AREA			28922.54 SQMT																			
NET PLOT AREA AS/SANCTION			26472 SQMT																			
NET PLOT AREA for FAR			25644.606 SQMT																			
PRINCIPAL FAR @2.5 OF 25644.606			64111.515 SQMT																			
PER. PURCHASABLE FAR @33% OF 64111.5			21156.80 SQMT																			
TOTAL PERMISSIBLE FAR			85268.31 SQMT.																			
	GROUND COVERAGE		STILT AREA FOR PARKING		FAR IN STILT		FAR 1ST TO 16TH FLOOR		FAR ON 17TH FLOOR		FAR 18TH TO 20TH FLOOR		TOTAL FAR ON ALL FLOORS		TOTAL FAR EXISTING + PROPOSED	TOTAL BASEMENT AREA		TOTAL COVD AREA ALL FLOORS		TOTAL NO. OF DWELLING UNITS	
	EXISTING	PROPOSED	EXISTING	PROPOSED	EXISTING	PROPOSED	EXISTING	PROPOSED	EXISTING	PROPOSED	EXISTING	PROPOSED	EXISTING	PROPOSED		EXISTING	PROPOSED	EXISTING	PROPOSED	EXISTING	PROPOSED
TOWER T-1	340.266	-	146.844	-	193.422	-	330.193	-	330.193	-	-	-	5806.703	-		-	-	-	-		
TOWER T-2	420.306	-	201.018	-	219.288	-	410.234	-	410.234	-	-	-	7193.266	-		-	-	-	-		
TOWER T-3	418.975	-	201.695	-	217.28	-	408.903	-	408.903	-	-	-	7168.631	-		-	-	-	-		
TOWER T-4	416.53	-	197.629	-	218.901	-	406.457	-	406.457	-	-	-	7128.67	-		-	-	-	-		
TOWER T-5	601.823	-	263.773	-	338.049	-	591.878	-	591.878	-	-	-	10399.975	-		-	-	-	-		
TOWER T-6	601.823	-	263.773	-	338.049	-	591.878	-	591.878	-	-	-	10399.975	-		-	-	-	-		
TOWER T-7	601.823	-	263.773	-	338.049	-	591.878	-	591.878	-	-	-	10399.975	-		-	-	-	-		
TOWER T-8	601.823	-	263.773	-	338.049	-	591.878	-	591.878	-	-	-	10399.975	-		-	-	-	-		
TOWER T-9	-	734.102	-	-	-	199.427	-	700.298	-	559.569	-	559.569	-	13642.471		-	-	-	-		
TOTAL	4003.389	734.102	1802.278	-	2201.087								68897.17	13642.471	82539.641	15357.148	7374.718	86056.6	21751.291	560	76

PLOT AREA AS/ OWNERSHIP =28922.54 SQMT.
PLOT AREA AS/ SITE =28205.148 SQMT.
NET PLOT AREA AS/SANCTION =26472.00 SQMT.
NET PLOT AREA FOR FAR CALCULATION =25644.606 SQMT.

PLOT AREA DETAIL

1)	165.671 X 86.169	= 14280.494
2)	156.447 X 39.192	= 6213.233
3)	35.670 X 71.718	= 2558.181
4)	27.358 X 82.273	= 2238.808
5)	35.192 X 105.791 /2	= 1863.411
6)	156.447 X 38.307 /2	= 3014.814
7)	7.424 X 98.157	= 363.823
8)	8.707 X 82.673/2	= 357.304
9)	71.263 X 3.385/2	= 85.649
10)	165.671 X 5.518/2	= 457.721
11)	2.142X 28.065	= 61.328
12)	8.741 X 2.142/2	= 9.351
13)	30.627X 1.092/2	= 16.485
14)	27.358X 1.294/2	= 17.135
TOTAL OF 1 TO 14		=28205.148 SQM

PEARL COURT				
KHASRA WISE AREA DETAIL OF GROUP HOUSING AT POCKET-10 SECTOR - 7, VASHSALI, GHAZIABAD.				
KHASRA NO.	VILLAGE	BIGHA	BISWA	BISWANSA
305	MAKANPUR	1	2	0
306	MAKANPUR	3	8	14
307	MAKANPUR	1	3	10
308	MAKANPUR	1	14	12
309	MAKANPUR	2	10	0
310	MAKANPUR	10	0	
TOTAL AREA		11	8	16
OR 28922.540 SQ.M.				

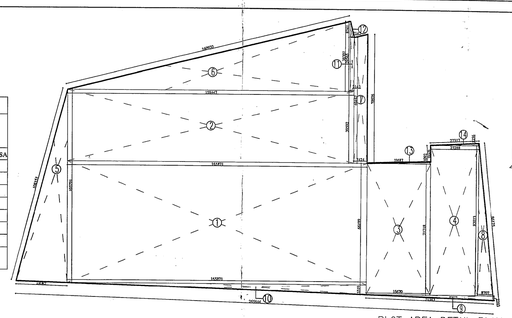

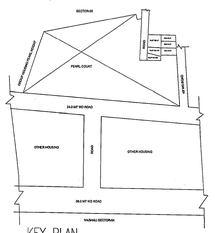

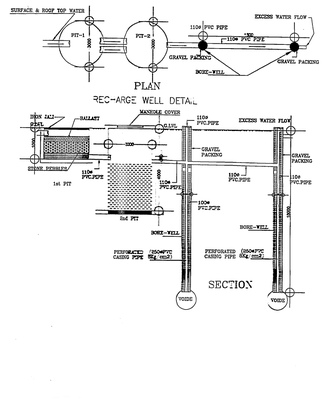

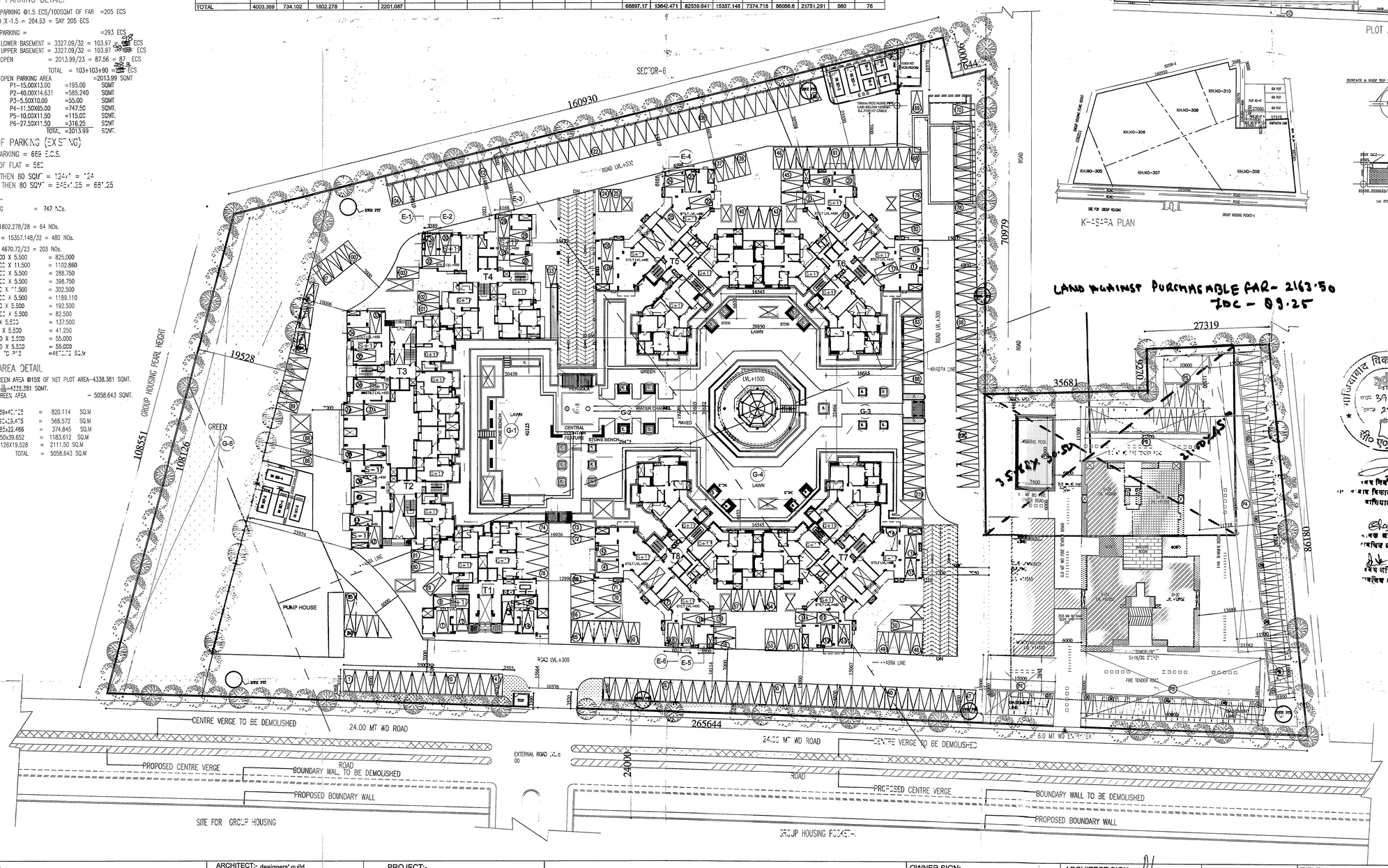

LAND AGAINST PURCHASABLE FAR- 2163.50
TDC - 09.25

CLIENT:-
M/S RAMPRASTHA BUILDERS PVT. LTD.
Reg. off. B-23/25, KAILASH COLONY, NEW DELHI-48
Mkt. Off. C-168, RAMPRASTHA, GHAZIABAD

ARCHITECT:- designers' guild
u n i t e d
D-2,SECTOR-7
NOIDA-201301
Ph: 0120-4323408
e-mail:- designersguild@gmail.com

PROJECT:-
PROPOSED TOWER T9 IN GROUP HOUSING (PEARL COURT), ON KHASARA NO. 305,306,307,308,309,310 , VILL MAKANPUR RAMPRASTHA GREENS VAISHLAI, GHAZIABAD FOR M/S RAMPRASTHA BUILDERS PVT. LTD.

OWNER SIGN:-
For Ramprastha Builders Pvt. Ltd.
Authorised Signatory

ARCHITECT SIGN:-
Rakesh Kumar Singh
Architect-Urban Planner
CA/92/14727

SCALE=1:300

TITLE:-
LAYOUT PLAN (TOWER - T9)

Drg. No
LA-T9-01