TOTAL F.A.R. AREA AT TYPICAL FLOOR (16th to 18th FLOOR)						
S.NO.	PARTICULARS					AREA(SQ.M)
FAR AREA OF UNIT-1	=	119.019	X	2	=	238.038
FAR AREA OF UNIT-2	=	59.360	X	2	=	118.720
FAR AREA OF UNIT-3	=	78.500	X	2		157.000
FAR AREA OF UNIT-4	=	121.387	X	1	=	121.387
FAR AREA OF CIRCULATION	=	87.881	X	1	=	87.881
TOTAL F.A.R AREA					=	723.026

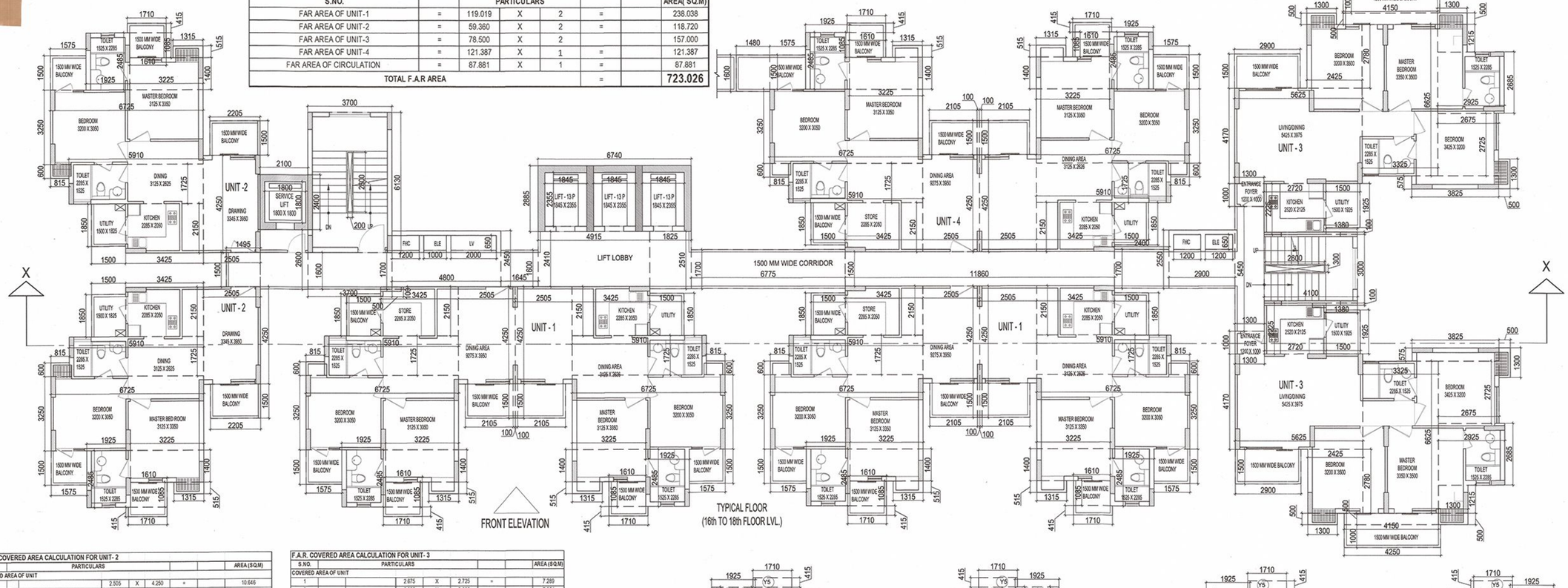

F.A.R. COVERED AREA CALCULATION FOR UNIT- 2							
S.NO.	PARTICULARS						AREA (SQ.M)
COVERED AREA OF UNIT							
1		2.505	X	4.250	=		10.646
2		3.425	X	2.150	=		7.364
3		5.910	X	1.725	=		10.195
4		6.725	X	3.250	=		21.856
5		3.225	X	1.400	=		4.515
6		1.925	X	2.485	=		4.784
TOTAL FAR AREA - (A)					=		59.360
NON F.A.R AREA OF BALCONY (B)= (Y1 + Y2 + Y3 + Y4 + Y5)							
Y1		2.205	X	1.500	=	3.308	
Y2		1.500	X	1.850	=	2.775	
Y3		1.575	X	1.500	=	2.363	
Y4		1.610	X	1.085	=	1.747	
Y5		1.710	X	0.415	=	0.710	
TOTAL (B) (Y1+Y2 + Y3 + Y4+ Y5)					=	10.902	
COVERAGE AREA FOR UNIT - 2 = F.A.R AREA + (B) BALCONY AREA							
1	(A) F.A.R AREA				=		59.360
2	(B) NON FAR AREA BALCONY				=		10.902
TOTAL UNIT FAR AREA							70.261

F.A.R. COVERED AREA CALCULATION FOR UNIT- 3							
S.NO.	PARTICULARS						AREA (SQ.M)
COVERED AREA OF UNIT							
1		2.675	X	2.725	=		7.289
2		2.925	X	2.685	=		7.854
3		1.300	X	1.215	=		1.580
4		3.325	X	6.625	=		22.028
5		2.425	X	2.780	=		6.742
6		5.625	X	4.170	=		23.456
7		1.300	X	1.000	=		1.300
8		2.720	X	2.225	=		6.052
9		3.825	X	0.575	=		2.199
TOTAL FAR AREA - (A)					=		78.500
NON F.A.R AREA OF BALCONY (B)= (Y1 + Y2 + Y3 + Y4)							
Y1		1.500	X	1.925	=	2.888	
Y2		2.900	X	1.500	=	4.350	
Y3		4.150	X	0.500	=	2.075	
Y4		4.250	X	1.000	=	4.250	
TOTAL (B)(Y1 + Y2 + Y3 + Y4)					=	13.563	
COVERAGE AREA FOR UNIT - 3 = F.A.R AREA + (B) BALCONY AREA							
1	(A) F.A.R AREA				=		78.500
2	(B) NON FAR AREA BALCONY				=		13.563
TOTAL UNIT FAR AREA							92.062

F.A.R. COVERED AREA CALCULATION FOR UNIT-1							
S.NO.		PARTICULARS					AREA (SQ.M)
COVERED AREA OF UNIT							
1	2	X	0.100	X	1.500	=	0.300
2	2	X	2.505	X	4.250	=	21.293
3	2	X	3.425	X	2.150	=	14.728
4	2	X	5.910	X	1.725	=	20.390
5	2	X	6.725	X	3.250	=	43.713
6	2	X	3.225	X	1.400	=	9.030
7	2	X	1.925	X	2.485	=	9.587
TOTAL FAR AREA - (A)						=	119.019
NON F.A.R AREA OF BALCONY (B)= (Y1 + Y2 + Y3 + Y4 + Y5)							
Y1	2	X	2.105	X	1.500	=	6.315
Y2	2	X	1.500	X	1.850	=	5.550
Y3	2	X	1.575	X	1.500	=	4.725
Y4	2	X	1.610	X	1.085	=	3.494
Y5	2	X	1.710	X	0.415	=	1.419
TOTAL (B) (Y1+Y2 + Y3 + Y4+ Y5)						=	21.503
COVERAGE AREA FOR UNIT - 1 = F.A.R AREA + (B) BALCONY AREA							
1	(A) F.A.R AREA					=	119.019
2	(B) NON FAR AREA BALCONY					=	21.503
TOTAL UNIT FAR AREA							140.522

F.A.R. COVERED AREA CALCULATION FOR CIRCULATION							
S.NO.		PARTICULARS					AREA(SQ.M)
A1		4.100	X	3.000	=		12.300
A2		1.380	X	0.100	=		0.138
A3		1.380	X	0.100	=		0.138
A4		6.740	X	2.884			19.438
A5		2.100	X	2.400	=		5.040
CD1		1.495	X	1.500	=		2.243
CD2		3.700	X	1.600	=		5.920
CD3		0.500	X	0.100	=		0.050
CD4		4.800	X	2.450	=		11.760
CD5		1.645	X	1.600	=		2.632
CD6		7.775	X	1.700	=		13.218
CD7		11.860	X	1.500	=		17.790
CD8		2.400	X	1.700	=		4.080
CD9		2.900	X	2.550	=		7.395
CD10		1.300	X	5.450	=		7.085
TOTAL							109.226
AREA SUBTRACTION							
LIFT WELL							
L1	1	X	1.800	X	1.800	=	3.240
L2	3	X	1.845	X	2.355	=	13.035
STAIRCASE CUTOUT							
XX1		2.600	X	0.300	=		0.780
FH1	2	X	1.200	X	0.650	=	1.560
EL1		1.000	X	0.650	=		0.650
EL2		1.200	X	0.650	=		0.780
LV1		2.000	X	0.650	=		1.300
							21.345
TOTAL							87.881

AREA CALCULATION TOWARDS 15% ADDITIONAL F.A.R							
S.NO.		PARTICULARS					AREA (SQ.M)
FIRE STAIRECASE AREA							
FS1		3.700	X	6.130	=		22.681
TOTAL FIRE STAIRECASE AREA					=		22.681
LIFT WELL							
L1	1	X	1.800	X	1.800	=	3.240
L2	3	X	1.845	X	2.355	=	13.035
TOTAL LIFT WELL AREA					=		16.275
LIFT LOBBY							
LL1		2.100	X	2.600	=		5.460
LL2		4.915	X	2.410	=		11.845
LL3		1.825	X	2.510	=		4.581
TOTAL LIFT LOBBY AREA					=		21.886
CUPBOARDS							
C1	6	X	1.315	X	0.515	=	4.063
C2	6	X	0.815	X	0.600	=	2.934
C3	6	X	1.300	X	0.500	=	3.900
C4	2	X	1.315	X	0.515	=	1.354
C5	2	X	0.815	X	0.500	=	0.815
TOTAL CUPBOARDS AREA					=		6.069
F.H.C SHAFT							
FH1	2	X	1.200	X	0.650	=	1.560
TOTAL F.H.C SHAFT AREA					=		1.560
LVSHAFT							
LV1		2.000	X	0.650	=		1.300
TOTAL LV SHAFT AREA					=		1.300
ELECTRICAL SHAFT							
EL1		1.000	X	0.650	=		0.650
EL2		1.200	X	0.650	=		0.780
TOTAL ELECTRICAL SHAFT AREA					=		0.780
TOTAL 15% ADDITIONAL F.A.R AREA							70.551
AREA SUBTRACTION							
STAIRCASE CUTOUT							
FX1		2.600	X	0.200	=		0.520
TOTAL STAIRCASE CUTOUT AREA					=		0.520
TOTAL 15% ADDITIONAL F.A.R AREA							70.031

F.A.R. COVERED AREA CALCULATION FOR UNIT- 4							
S.NO.		PARTICULARS					AREA (SQ.M)
COVERED AREA OF UNIT							
1	2	X	0.100	X	1.500	=	0.300
2	2	X	2.505	X	4.250	=	21.293
3	2	X	3.425	X	2.150	=	14.728
4	2	X	5.910	X	1.725	=	20.390
5	2	X	6.725	X	3.250	=	43.713
6	2	X	3.225	X	1.400	=	9.030
7	2	X	1.925	X	2.485	=	9.587
TOTAL FAR AREA						=	119.019
BALCONY F.A.R AREA							
X1	CONNECTING BRIDGE	1.460	X	1.600	=	2.368	
						=	2.368
TOTAL F.A.R AREA FOR UNIT - 4 = F.A.R AREA + (B) BALCONY AREA							121.387
NON F.A.R AREA OF BALCONY (B)= (Y1 + Y2 + Y3 + Y4+ Y5)							
Y1	2	X	2.105	X	1.500	=	6.315
Y2	3	X	1.500	X	1.850	=	5.550
Y3	4	X	1.575	X	1.500	=	4.725
Y4	5	X	1.610	X	1.085	=	3.494
Y5	6	X	1.710	X	0.415	=	1.419
TOTAL (B) (Y1+Y2 + Y3 + Y4+ Y5)						=	21.503
COVERAGE AREA FOR UNIT - 4 = F.A.R AREA + (B) BALCONY AREA							
1	(A)F.A.R AREA					=	119.019
2	(B) FAR AREA BALCONY					=	2.368
3	(C) NON FAR AREA BALCONY					=	21.503
TOTAL UNIT 4 AREA							142.890

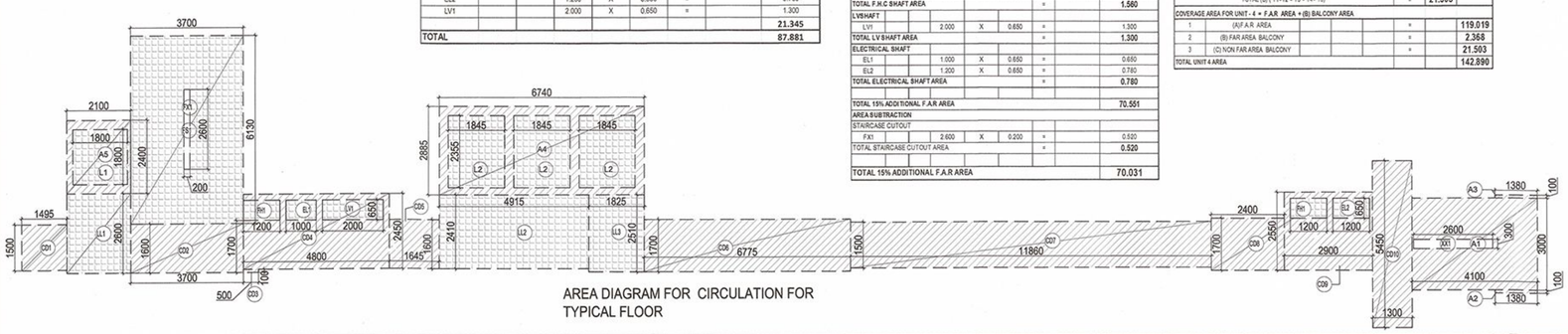

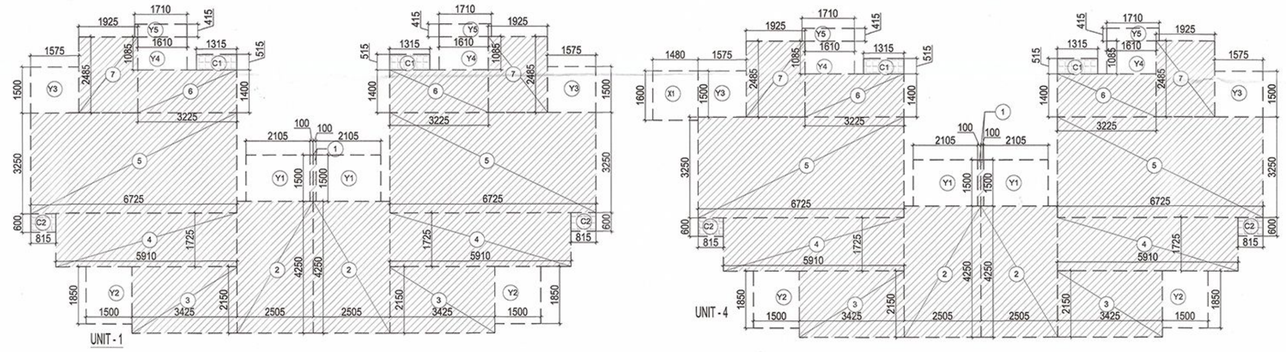

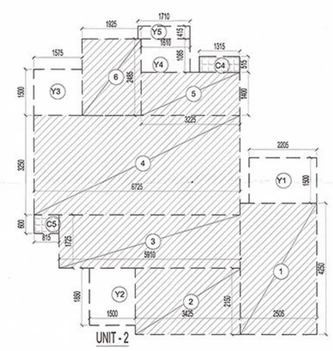

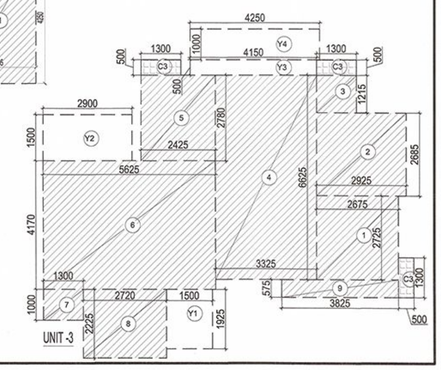

This drawing is a "COPYRIGHT" contents of this drawing or part thereof may not be used or reproduced without the permission of the Architect

NO. OF PRINT	DATE	ISSUED TO	REMARKS
REVISION	DATE	DESCRIPTION	BY

Yamuna Expressway Indl. Development Authority
APPROVED
Vide Letter No. PA/TP-331/2014 Date 24/12/2014
Valid Upto Date 03/01/2015
Sr. Executive (Planning) Gen. Manager (Plng. & Arch.)
Drawing Checked & Verified By
Manager (Plng.)

SCHEDULE OF OPENINGS

S.NO.	TYPE	WIDTH	HEIGHT	CILL	LINTEL	REMARKS
1.	D1	1000	2150	-	2150	BEDROOM
2.	D2	800	2150	-	2150	TOILET
3.	D3	800	2150	-	2150	SER. ROOM
4.	DW1	3450	2400	0/300	2400	DRAWING RM.
5.	DW2	2200	2400	0/300	2400	BEDROOM
6.	DW3	1710	2400	0/300	2400	MAIN ENTRY
7.	DW4	1660	2400	0/300	2150	DRAWING RM.
8.	DW5	1420	2150	0/300	2150	DRAWING RM.
9.	DW6	2020	2150	0/300	2150	TERRACE ENT.
10.	DW7	2095	2400	0/300	2400	BALCONY
11.	DW8	1990	2400	0/300	2400	BALCONY
12.	W1	3190	2400	0/300	2400	DINING
13.	W2	1990	2150	0/300	2150	STAIRCASE
14.	W3	800	1300	850	2450	TOILET

SUBMISSION DRAWING

CLIENT
M/S OASIS REALTECH PVT LTD

PROJECT
OASIS GrandStand
PROPOSED GROUP HOUSING FOR
M/S OASIS REALTECH PVT LTD
GH-01-TS-01/B ,SECTOR-22D,YEIDA,
GB NAGAR (U.P.)

DATE	PROJECT INCHARGE	CHECKED BY
20.12.2014	AMIT MAURYA	BALRAJ SINGH
SCALE	DEALT BY	APPROVED BY
1:100	PRADEEP NEGI	VISHAL SHARMA

DRAWING TITLE
TYPICAL FLOOR PLAN
(16th TO 18th FLOOR)

BLOCK - 1 (WING-3 & 4)

OWNER SIGN
For Oasis Realtech Pvt. Ltd.
Director

ARCHITECT SIGN
VISHAL SHARMA ARCHITECT CA-98/23281 9310164888 NEW DELHI

Yamuna Authority Approved 17/12/14

ARCHITECTS
Confluence
S-29, GSC-2 S.D.A.,NEW DELHI
Ph. +91-11-29215008 Ph. +91-11-45064789
ccs@inconfluence.com www.inconfluence.com
Member of IGBC ISO - 9001 : 2000
architecture urban design hospitality interiors

DRAWING NO. S-027
REVISION R0

This drawing is available on www.files.inconfluence.com.