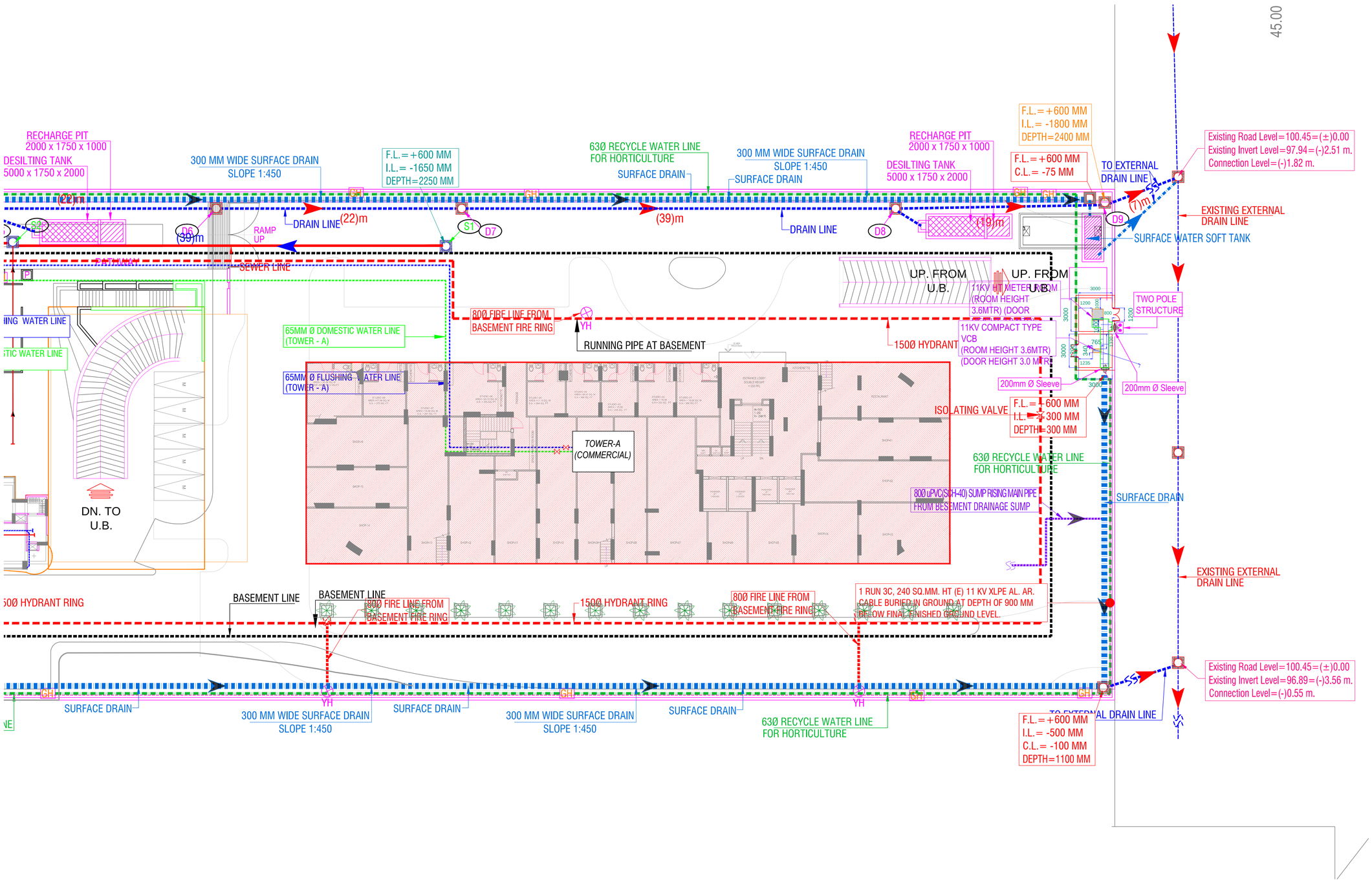

DASNAC

KEY PLAN :

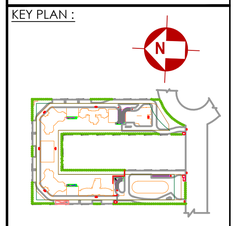

LEGEND :

S. No.	SYMBOL	DESCRIPTION
1.	M.H.	MANHOLE
2.		SEWER LINE
3.		BYPASS MANHOLE
4.		BYPASS SEWER LINE
5.	C.P.	CATCH PIT
6.		UNDER GROUND DRAIN
7.		SURFACE DRAIN
8.		SAUCES DRAIN
9.		BYPASS BALANCE TREATED WATER LINE
10.		SUMP RISING MAIN LINE
11.		RAIN WATER HARVESTING
12.		RECYCLED WATER SUPPLY PIPE LINE.
13.		RISING MAIN WATER PIPE LINE.
14.		MUNICIPAL WATER SUPPLY PIPE LINE.
15.		ISOLATING VALVE
16.		BASEMENT LINE
17.	YH	GARDEN HYDRANT
18.		FLUSHING WATER LINE

LEGEND : FIRE SYSTEM

S. No.	SYMBOL	DESCRIPTION
1.		FIRE LINE
2.	YH	YARD HYDRANT 63 M.M. DIA. SINGLE HEADED HYDRANT VALVE WITH 2 NOS. 15 M. LONG, 63 M.M. DIA. FIRE HOSE PIPE & 1 NO. BRANCH PIPE WITH NOZZLE
3.		FIRE BRIGADE CONNECTION
4.		BUTTERFLY VALVE
5.		NONRETURN VALVE (CHECK VALVE)
6.		ISOLATING VALVE WITH MASONARY CHAMBER

Architects DESIGNARCH CONSULTANT PVT.LTD
C-62, Preet Vihar,
New Delhi-110092,India
Ph No: +91-11-42441242

OWNER:
E- HOMES INFRASTRUCTURE PVT LTD
DASNAC ANNEXE 1, 28 A , KG MARG , DELHI

Job Title :
BURJ NOIDA
PLTO NO-14, GOLF CITY, SECTOR-75,
NOIDA, GAUTAM BUDH NAGAR (U.P.)

DRAWING TITLE:
DEVELOPMENT WORK PLAN

ARCHITECT'S SIGN	PROMOTOR'S SIGN

Job No.	Drawing No
Drawn / Checked	A-11
Date / Scale NTS	