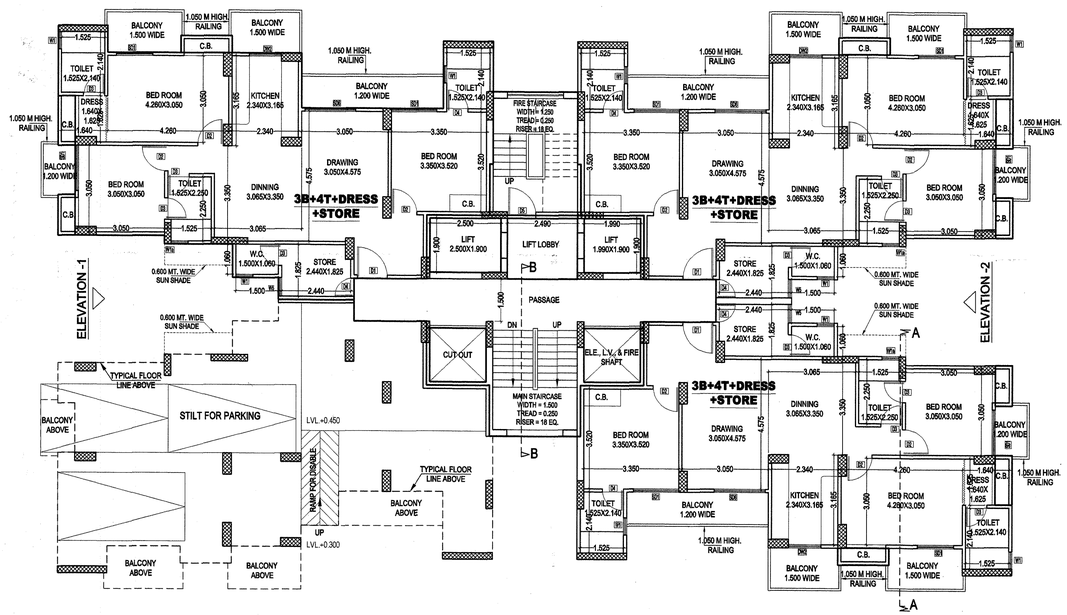

GROUND/STILT FLOOR PLAN

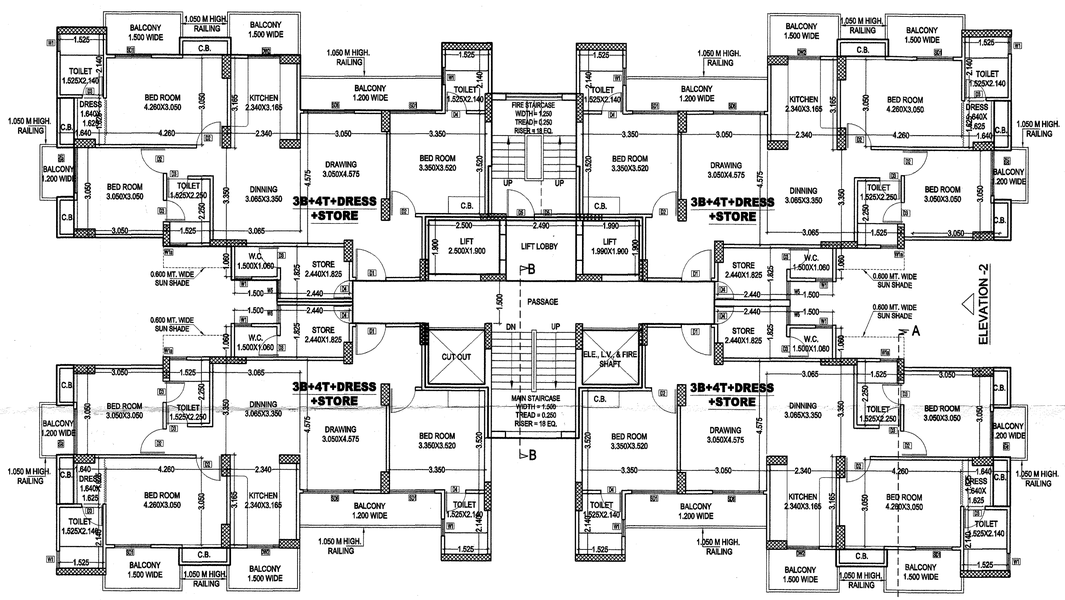

TYPICAL FLOOR PLAN (1st to 18th)

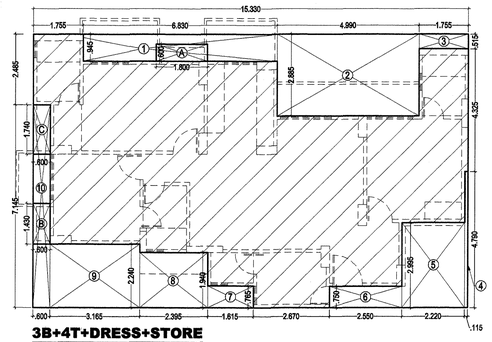

3B+4T+DRESS+STORE

3B+4T+DRESS+STORE					
UNIT AREA = (15.330x 9.630) = 147.628 - 48.125 (LESS AREA) = 99.503 SQ MT.					
S.NO	LENGTH		WIDTH		LESS AREA (SQ MT.)
1	6.830	x	0.945	=	6.454
2	4.990	x	2.885	=	14.396
3	1.755	x	0.515	=	0.904
4	0.115	x	4.790	=	0.551
5	2.220	x	2.995	=	6.649
6	2.550	x	0.750	=	1.913
7	1.615	x	0.765	=	1.235
8	2.395	x	1.940	=	4.646
9	3.165	x	2.240	=	7.090
10	0.600	x	7.145	=	4.287
TOTAL				=	48.125
CUP-BOARD AREA CALCULATION (Not include in F.A.R)					
A	1.800	x	0.600	=	1.080
B	0.600	x	1.430	=	0.858
C	0.600	x	1.740	=	1.044
TOTAL				=	2.982

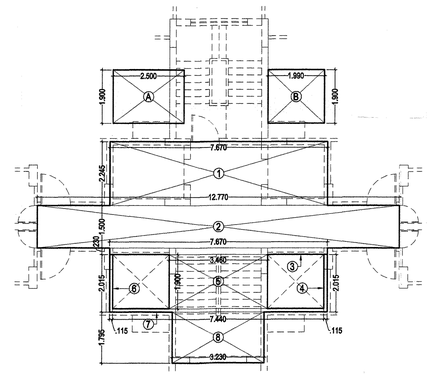

CIRCULATION AREA CALCULATION

GROUND FL. AREA = TYPICAL CORE AREA + {(A+B)} = 37.994 + {(2.500x1.900)+(1.990X1.900)} = 46.525 SQ MT.					
TYPICAL CORE AREA = TOTAL AREA -(A+B+C) = 51.829 -{(2.500x1.900)+(1.990X1.900) +5.304 = 37.994 SQ MT.					
S.NO	LENGTH		WIDTH		AREA (SQ MT.)
1	7.670	x	2.245	=	17.219
2	12.770	x	1.500	=	19.155
3	7.670	x	0.230	=	1.764
4	0.115	x	2.015	=	0.232
5	3.460	x	1.900	=	6.574
6	0.115	x	2.015	=	0.232
7	7.440	x	0.115	=	0.856
8	3.230	x	1.795	=	5.798
TOTAL CORE AREA				=	51.829
GROUND COVERAGE AREA DETAIL = [STILT + {(3B+4T+DRESS+STORE +C.B.)x3} + TOTAL CORE AREA + FIRE STAIR]					
(102.485 + 307.455 + 51.829 + 13.448) = 475.217 SQ MT.					

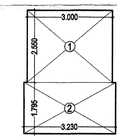

FIRE STAIRCASE AREA DIAGRAM

FIRE STAIR AREA (SQ MT.)					
SNO.	LENGTH		WIDTH		AREA (SQ MT.)
1	3.000	x	2.550	=	7.650
2	3.230	x	1.795	=	5.798
TOTAL				=	13.448

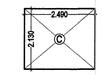

LOBBY AREA DIAGRAM

(MAX. 10 SQ MT. ALLOWED)

LIFT LOBBY AREA (SQ MT.)					
SNO.	LENGTH		WIDTH		AREA (SQ MT.)
C	2.490	x	2.130	=	5.304
TOTAL				=	5.304

(TOWER- E)	S-12
GR./STILT, TYPICAL FLOOR PLAN & AREA CHART	
DOORS & WINDOWS SCHEDULE	

S.NO.	TYPE	SIZE	S.LVL	L.LVL.
1	D1	1.050x2.100	±00	2.100
2	D2	0.900x2.100	±00	2.100
3	D3	0.750x2.100	±00	2.100
4	D4	0.835x2.100	±00	2.100
5	D5	1.000x2.100	±00	2.100
6	SD1	1.600x2.500	±00/+0.450	2.500
7	SD2	1.240x2.500	±00/+1.050	2.500
8	SD3	1.800x2.500	±00/+0.450	2.500
9	SD4	1.510x2.500	±00/+0.450	2.500
10	DW5	1.165x2.500	±00/+1.050	2.500
11	SD6	2.100x2.500	±00/+0.450	2.500
12	W1	0.600x1.450	+1.050	2.500
13	W2	0.900x1.450	+1.050	2.500
14	W3	0.915x1.800	+0.900	2.500
15	W4	0.865x1.800	+0.900	2.500
16	W5	0.650x1.800	+0.900	2.500

Map for proposed Building is as per Bye Laws submitted for approval Please.

Pt. Asstt. Asstt. Arch Architect

PROJECT TITLE :

REVISED GROUP HOUSING AT PLOT NO.GH-17, SEC- 75,NOIDA. FOR - M/S MAXBLIS CONSTRUCTION PVT. LTD.

DRAWING TITLE:-

GR./STILT, TYPICAL FLOOR PLAN & AREA CHART (TOWER - E) (G/S+18)

DRG.NO. S-12

SCALE	1:100
DATE	20130304
DEALT	
JOB NO.	\\Comp12\D\DATA\17-75,GARDENA\20130223_SUBMISSION \20130223_SUBMISSION

DEEPAK MEHTA & ASSOCIATES

ARCHITECTS, PLANNERS, VALUERS, LANDSCAPE & INTERIORS
PLOT NO. 16 ABHISHEK PLAZA L.S.C. MAYUR VIHAR PH II DELHI 91
PH: 65272180 TELEFAX: 22770180

Architect Deepak Mehta
CO-97/10640
Plot No. 16 Abhishek Plaza LSC
Mayur Vihar Ph-II, Delhi-91

ARCHITECT'S SIGN

For MAXBLIS CONSTRUCTION PVT. LTD.

Authorised Signatory

OWNER'S SIGN