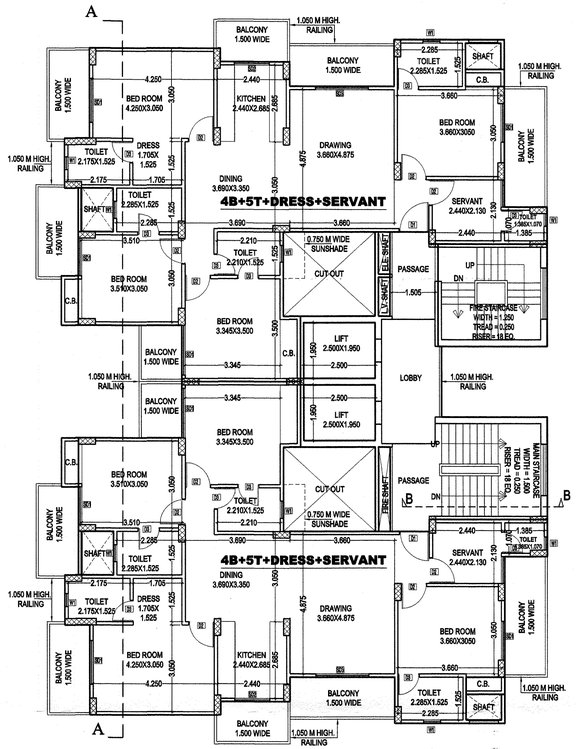

TYPICAL FLOOR PLAN (1st to 18th)

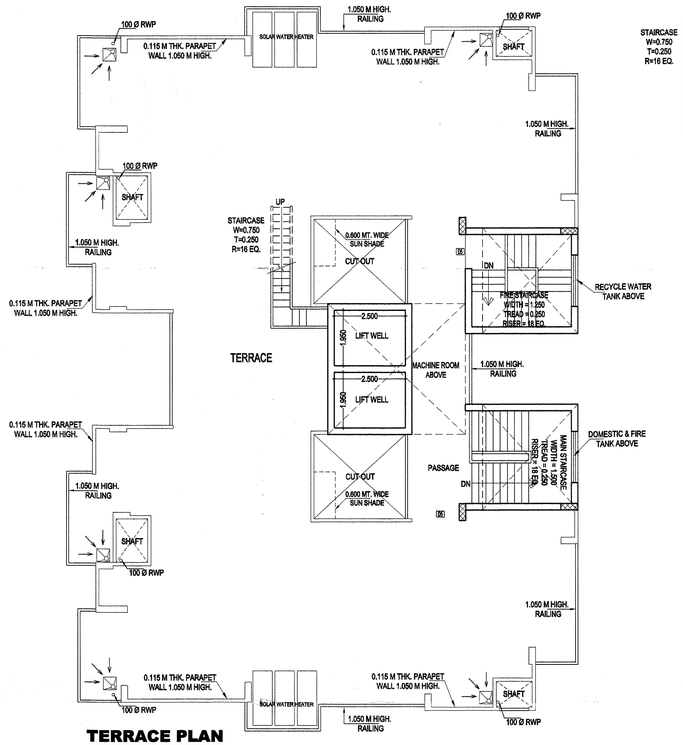

TERRACE PLAN

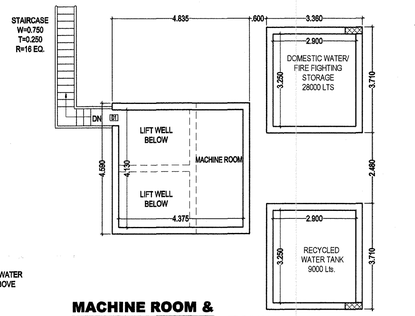

MACHINE ROOM & OVER HEAD WATER TANK

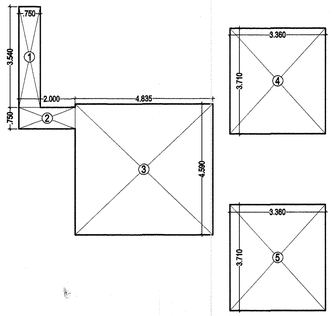

MACHINE ROOM & MUMTY AREA DIAGRAM

MACHINE RM. & MUMTY AREA					
SNO.	LENGTH		WIDTH		AREA (SQ.MT.)
1	0.750	x	3.540	=	2.655
2	2.000	x	0.750	=	1.500
3	4.835	x	4.590	=	22.193
4	3.360	x	3.710	=	12.466
5	3.360	x	3.710	=	12.466
TOTAL				=	51.279

TOWER J

	4B+5T+ Dress + Servant	4B+5T+ Dress + Servant						Core area	Total FAR	Cupboard Area per floor	Ground Coverage	Fire stair (Non FAR)	Stilt	M/R, mumty (Non FAR)	Actual Lobby area (FOR REFF.)	Lobby area Ancillary area	LIFT SHAFT Ancillary area	Commu-nity	Ancillary area	Nos. of units
	1	2	3	4	5	6	7	8	9	10	11	12	13	14		15	16	17	18	19
									(1 to 8)		9+10+12+13 +15+16+17								10+12+14+15+16+17	
Area details	122.680	122.680						38.074		3.726	603.001	13.823	0.000	51.279	8.745	8.745	9.750	484.709		
Ground / Stilt Floor								38.074	38.074	0.000	603.001	13.823	0.000		8.745	8.745		484.709	507.277	0
First Floor	122.680	122.680						28.324	273.684	3.726		13.823			8.745	8.745	9.750		36.044	2
Second Floor	122.680	122.680						28.324	273.684	3.726		13.823			8.745	8.745	9.750		36.044	2
Third Floor	122.680	122.680						28.324	273.684	3.726		13.823			8.745	8.745	9.750		36.044	2
Fourth Floor	122.680	122.680						28.324	273.684	3.726		13.823			8.745	8.745	9.750		36.044	2
Fifth Floor	122.680	122.680						28.324	273.684	3.726		13.823			8.745	8.745	9.750		36.044	2
Sixth Floor	122.680	122.680						28.324	273.684	3.726		13.823			8.745	8.745	9.750		36.044	2
Seventh Floor	122.680	122.680						28.324	273.684	3.726		13.823			8.745	8.745	9.750		36.044	2
Eighth Floor	122.680	122.680						28.324	273.684	3.726		13.823			8.745	8.745	9.750		36.044	2
Ninth Floor	122.680	122.680						28.324	273.684	3.726		13.823			8.745	8.745	9.750		36.044	2
Tenth Floor	122.680	122.680						28.324	273.684	3.726		13.823			8.745	8.745	9.750		36.044	2
Eleventh Floor	122.680	122.680						28.324	273.684	3.726		13.823			8.745	8.745	9.750		36.044	2
Twelfth Floor	122.680	122.680						28.324	273.684	3.726		13.823			8.745	8.745	9.750		36.044	2
Thirteenth Floor	122.680	122.680						28.324	273.684	3.726		13.823			8.745	8.745	9.750		36.044	2
Fourteenth Floor	122.680	122.680						28.324	273.684	3.726		13.823			8.745	8.745	9.750		36.044	2
Fifteenth Floor	122.680	122.680						28.324	273.684	3.726		13.823			8.745	8.745	9.750		36.044	2
Sixteenth Floor	122.680	122.680						28.324	273.684	3.726		13.823			8.745	8.745	9.750		36.044	2
Sixteenth Floor	122.680	122.680						28.324	273.684	3.726		13.823			8.745	8.745	9.750		36.044	2
Eighteenth Floor	122.680	122.680						28.324	273.684	3.726		13.823			8.745	8.745	9.750		36.044	2
M/R, mumty														51.279					51.279	
Total									4964.386		603.001		0.000						1207.343	38

(TOWER-J) S-21

TYPICAL ,TERRACE FLOOR PLAN & AREA CHART

DOORS & WINDOWS SCHEDULE

S.NO.	TYPE	SIZE	S.LVL	L.LVL
1	D1	1.050x2.100	±00	2.100
2	D2	0.900x2.100	±00	2.100
3	D3	0.750x2.100	±00	2.100
4	D4	0.635x2.100	±00	2.100
5	D5	1.000x2.100	±00	2.100
6	SD1	1.600x2.500	±00/+0.450	2.500
7	SD2	1.240x2.500	±00/+1.050	2.500
8	SD3	1.800x2.500	±00/+0.450	2.500
9	SD4	1.510x2.500	±00/+0.450	2.500
10	DW5	1.165x2.500	±00/+1.050	2.500
11	SD6	2.100x2.500	±00/+0.450	2.500
12	W1	0.600x1.450	+1.050	2.500
13	W2	0.900x1.450	+1.050	2.500
14	W3	0.915x1.600	+0.900	2.500
15	W4	0.665x1.600	+0.900	2.500
16	W5	0.650x1.600	+0.900	2.500

PROJECT TITLE :

REVISED GROUP HOUSING AT PLOT NO.GH-17, SEC- 75,NOIDA. FOR - M/S MAXBLIS CONSTRUCTION PVT. LTD.

DRAWING TITLE:-

TYPICAL,TERRACE FLOOR PLAN & AREA CHART TOWER - J (G/C+18)

DRG NO. S-21

SCALE	1:100
DATE	20130304
DEALT	
JOB NO.	\\Comp72\D\DATA\T-TEMP\DEEPAK\20131213_SUBMISSION\ 13013023_SUBMISSION

DEEPAK MEHTA & ASSOCIATES
ARCHITECTS, PLANNERS, VALUERS, LANDSCAPE & ENVIRONMENT DESIGNERS
PLOT NO. 16 ABHISHEK PLAZA L.S.C. MAYUR VIHAR PH II DELHI-91
PH: 65272180 TELEFAX: 22770180

Architect Deepak Mehta
COA/87/10840
Plot No. 16 Abhishek Plaza LSC
Mayur Vihar Ph-II, Delhi-91

ARCHITECT'S SIGN

For MAXBLIS CONSTRUCTION PVT. LTD.

Authorised Signatory

OWNER'S SIGN