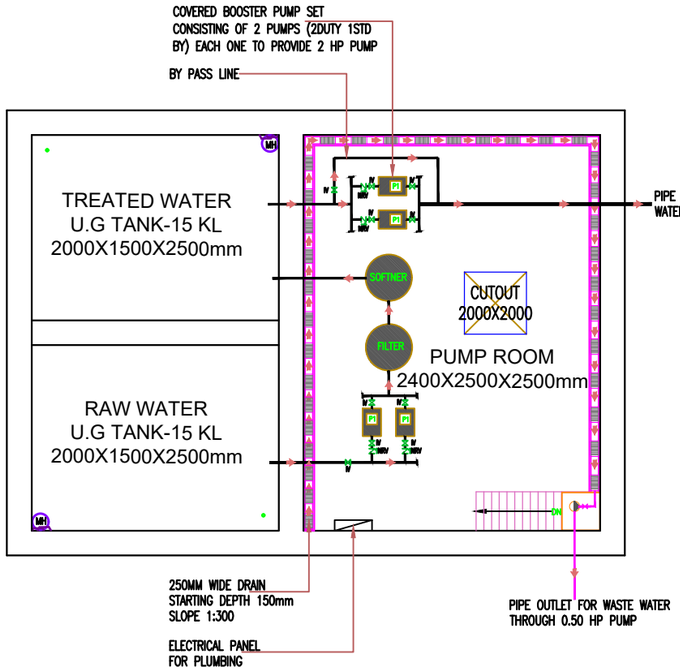


## UG TANK & PUMP ROOM DETAILS- AA

## LEGEND FOR PLUMBING - FIXTURES

| S.No. | Symbol | | Description |
|---|---|---|---|
| 1. | | | BORING EXTERNAL WATER MAIN LINE |
| 2. | | | INTERNAL WATER SUPPLY LINE |
| 3. | | SWS | SUBMERSIBLE WATER SUPPLY LINE |
| 4. | | IV | ISOLATION VALVE |
| 5. | | NRV | NON RETURN VALAVE |
| 6. | | PG | PRESSURE GAGE |
| 7. | | | FLOW INDICATE OF DIRECTION |
| 8. | | | BORING POINT |
| 9. | | | 600X600X750MM CHAMBER |

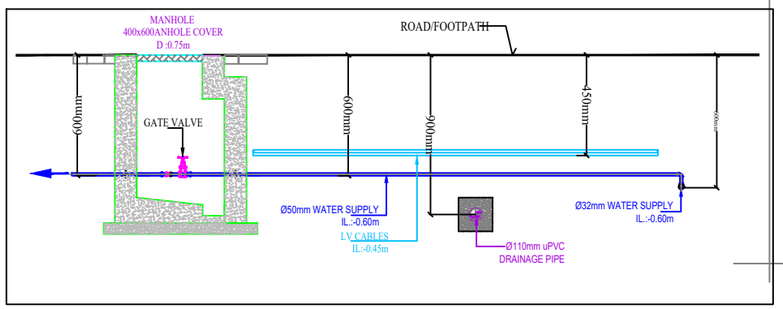


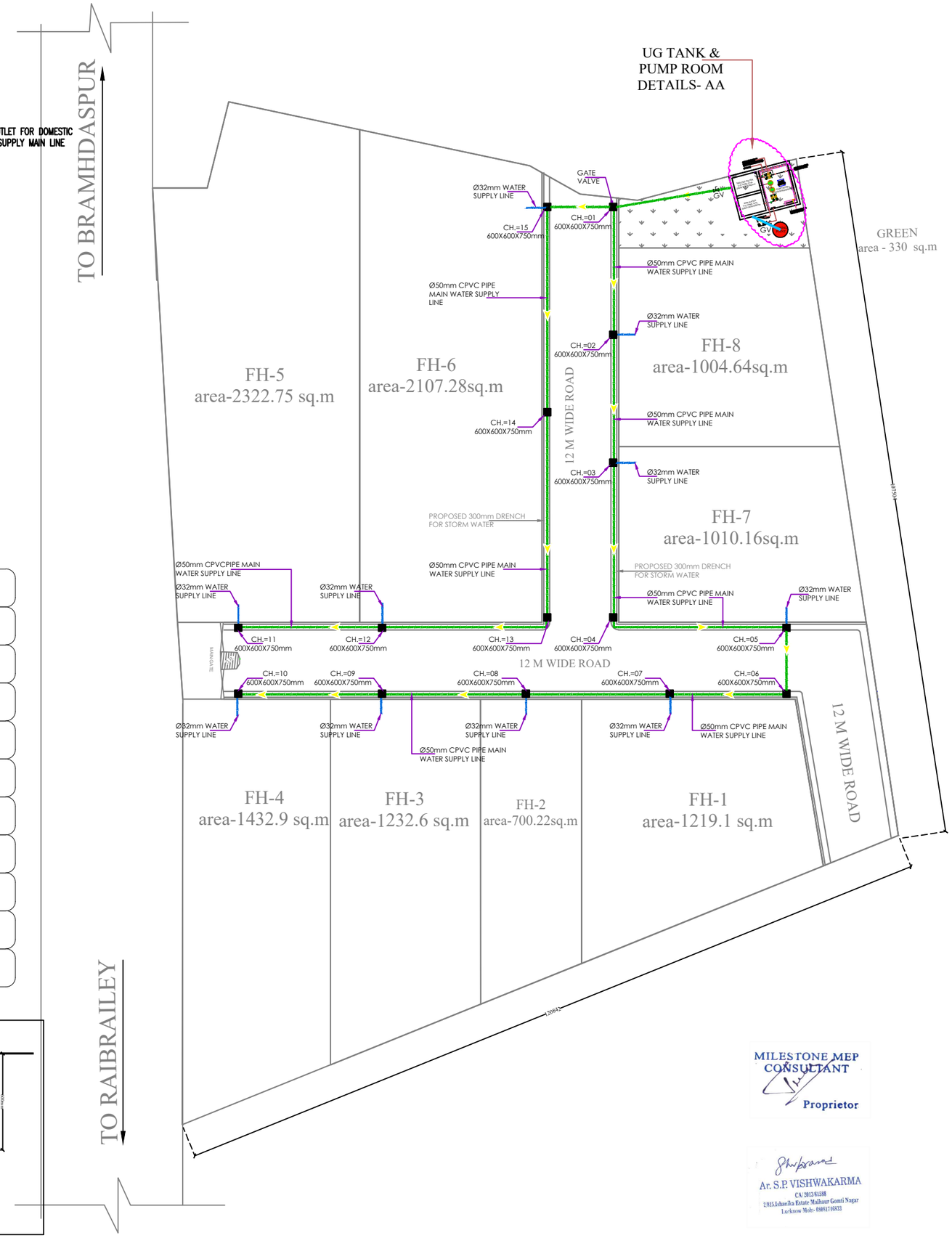


MILESTONE MEP CONSULTANT
Proprietor

Ar. S.P. VISHWAKARMA
CA/ 2013/61588
2/815,Esanika Estate Malhaur Gomti Nagar Lucknow Mob:- 08081746833

| LEGEND | | | | |
|---|---|---|---|---|
| S.NO | DESCRIPTION | QUANTITY | HEIGHT | REMARKS |
| | | | | |

**NOTES:**

1. ALL DIMENSIONS ARE IN FT.
3. NO DIMENSIONS TO BE SCALED OFF THE DRAWING ONLY WRITTEN DIMENSIONS TO BE FOLLOWED.
2. DISCREPANCIES IN DIMENSIONS OR OTHERWISE SHOULD BE BROUGHT TO THE NOTICE OF CONSULTANT BEFORE STARTING THE WORK.
3. ANY DISCREPANCY FOUND IN THE DRAWING TO BE IMMEDIATELY GOT CLARIFIED WITH THE ARCHITECT.
4. ALL DRAWINGS ARE INTER RELATED AND SHALL BE READ IN CONJUCTION WITH OTHER DRAWINGS.

GENRE:-

- FOR DISCUSSION
- FOR STRUCTURE
- FOR EXECUTION

**NORTH**

**PROJECT**

FARM HOUSE LAYOUT AT MOHANLAL GANJ, LUCKNOW

**CLIENT**

JMD GREEN

**DRAWING TITLE**

WATER SUPPLY LAYOUT

**DRAWING NO.**

---

| REVISION NO- | DATE OF ISSUE- |
|---|---|
| R-1 | 11/DEC/2025 |

**EXECUTINGAGENCY**

| SCALE- | SHEET SIZE- |
|---|---|
| NTS | A3 |
| DRAWN BY- | CHECKED BY- |
| KAMRAN | ER. TARIQ |


Milestone MEP Consultant
D2-30, Vibhuti khand, Gomti Nagar, Lucknow, U.P
Web: milestonemep.com
Email : milestonemepl@gmail.com
Ph : +91-9035506164

MARCHMANIA
Architects, Interior Designer & Landscaping
2/815, esanika state(near amity univercity ,Gate No.-03),malhaur gomti nagar
Lucknow, (UP)
Email:- arshiv1989@gmail.com
Mob :- 08081746833