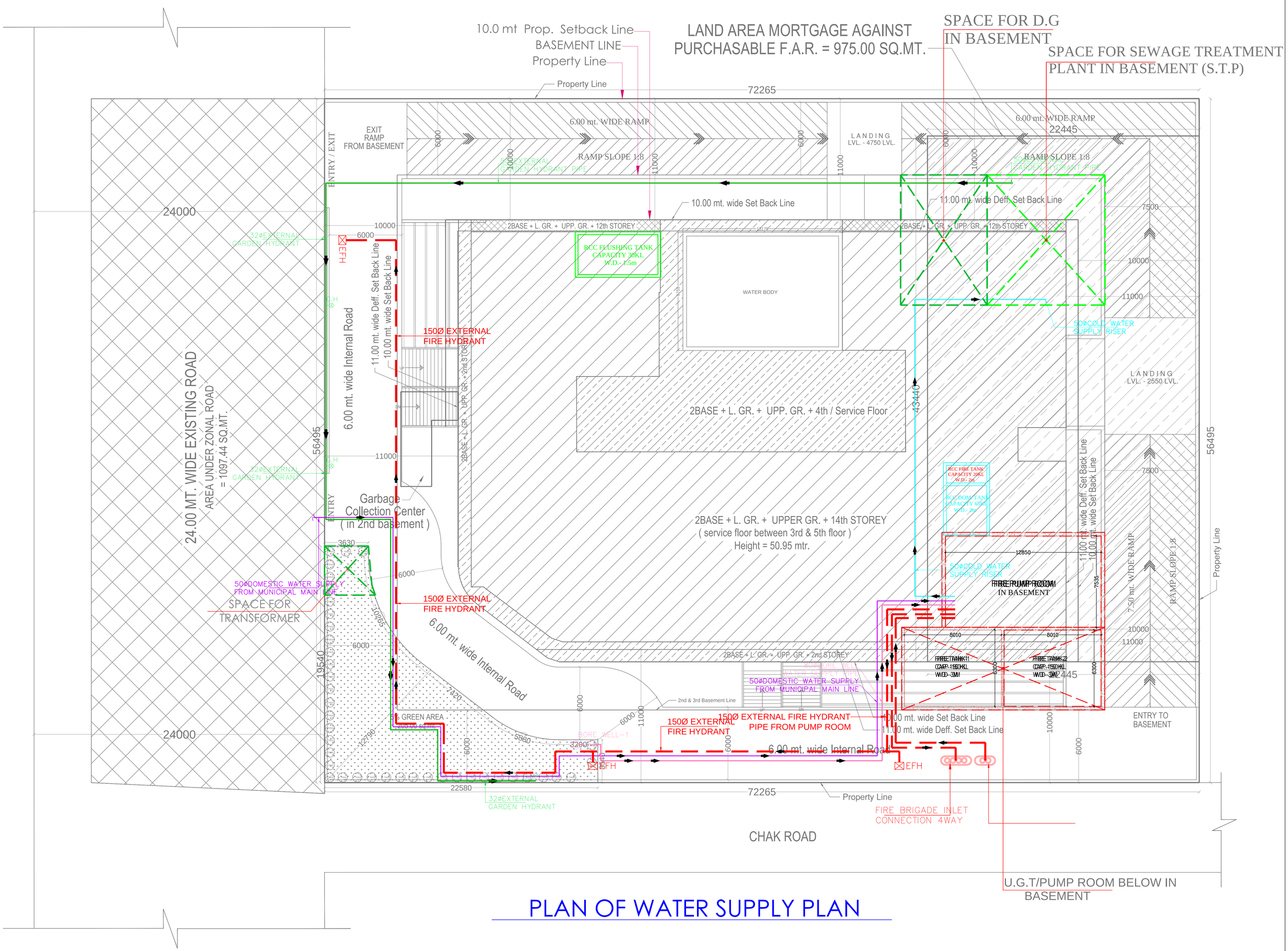

PLAN OF WATER SUPPLY PLAN

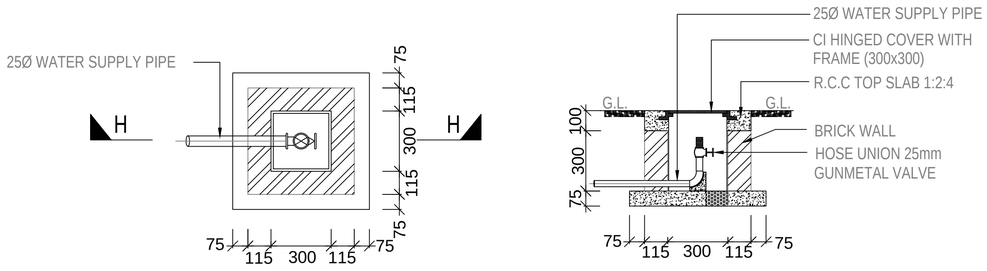

PLAN

SECTION-H-H

TYPICAL DETAIL OF GARDEN HYDRANT

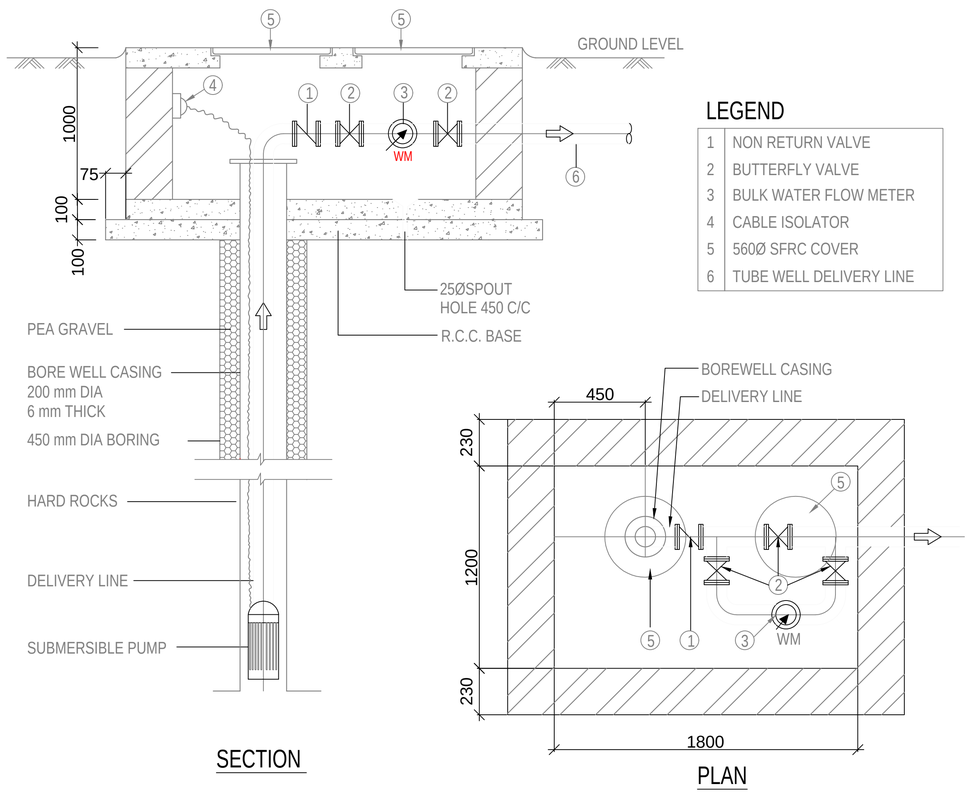

LEGEND

1	NON RETURN VALVE
2	BUTTERFLY VALVE
3	BULK WATER FLOW METER
4	CABLE ISOLATOR
5	560Ø SFRC COVER
6	TUBE WELL DELIVERY LINE

SECTION

PLAN

LEGEND :-

S.No.	DESCRIPTION	SYMBOL
1.	GARDEN HYDRANT PIPE	
2.	BORE WELL PIPE	
3.	MUNICIPAL PIPE	
4.	GARDEN HYDRANT	
5.	BORE WELL	

PROJECT : REVISED SUBMISSION DRAWINGS FOR THE PROPOSED BUDGET HOTEL BUILDING AT KHASRA NO.- 1216 , 1217 & 1218 / 1392 AT VILLAGE NOOR NAGAR GHAZIABAD (U.P.)

OWNER:- M/s. - SHRINATH JI PROMOTERS & DEVELOPERS

THROUGH:- Mr. - RAKESH KUMAR AGGARWAL

PLAN OF WATER SUPPLY PLAN

Architects Anuj Agarwal CA/96/19503 A-244, Kaushambi Ghaziabad

MEP CONSULTANT:

WAC Engineers INDIA PVT. LTD.
MEP Consultants & Project Managers
B-78,Sector-6, Noida,UP-201301

Design Studio

ANUJ AGARWAL ARCHITECTS
OFFICE:- A-244 KAUSHAMBI GHAZIABAD (U.P.)
Ph:-0120 - 6454182 , 4165712, TEL. FAX - 2773592
e-mail : arch.anujagarwal@gmail.com

SCALE	DATE	DEALT BY	CHECKED BY	SHEET NO.
N.T.S				