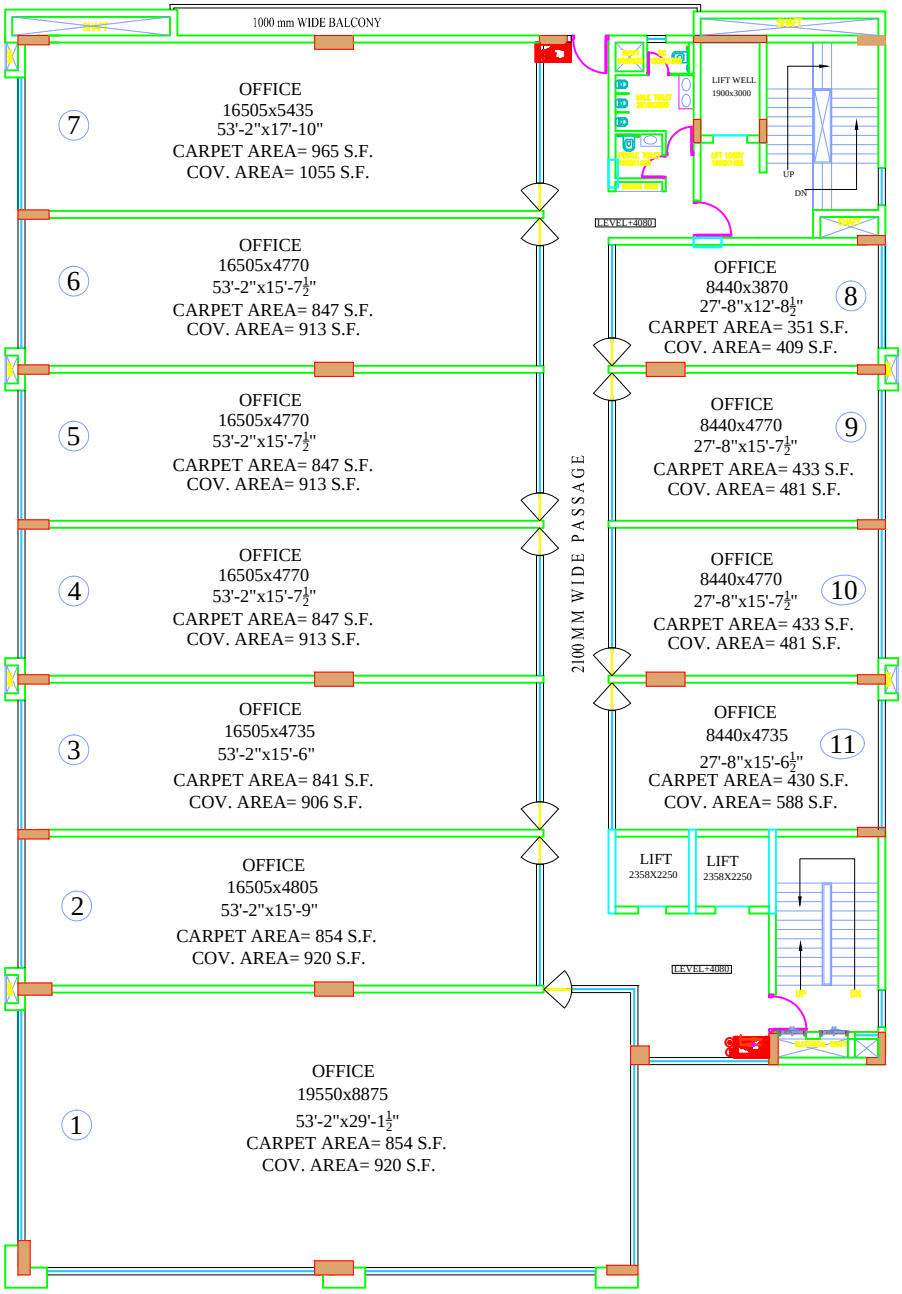

FIRST FLOOR PLAN