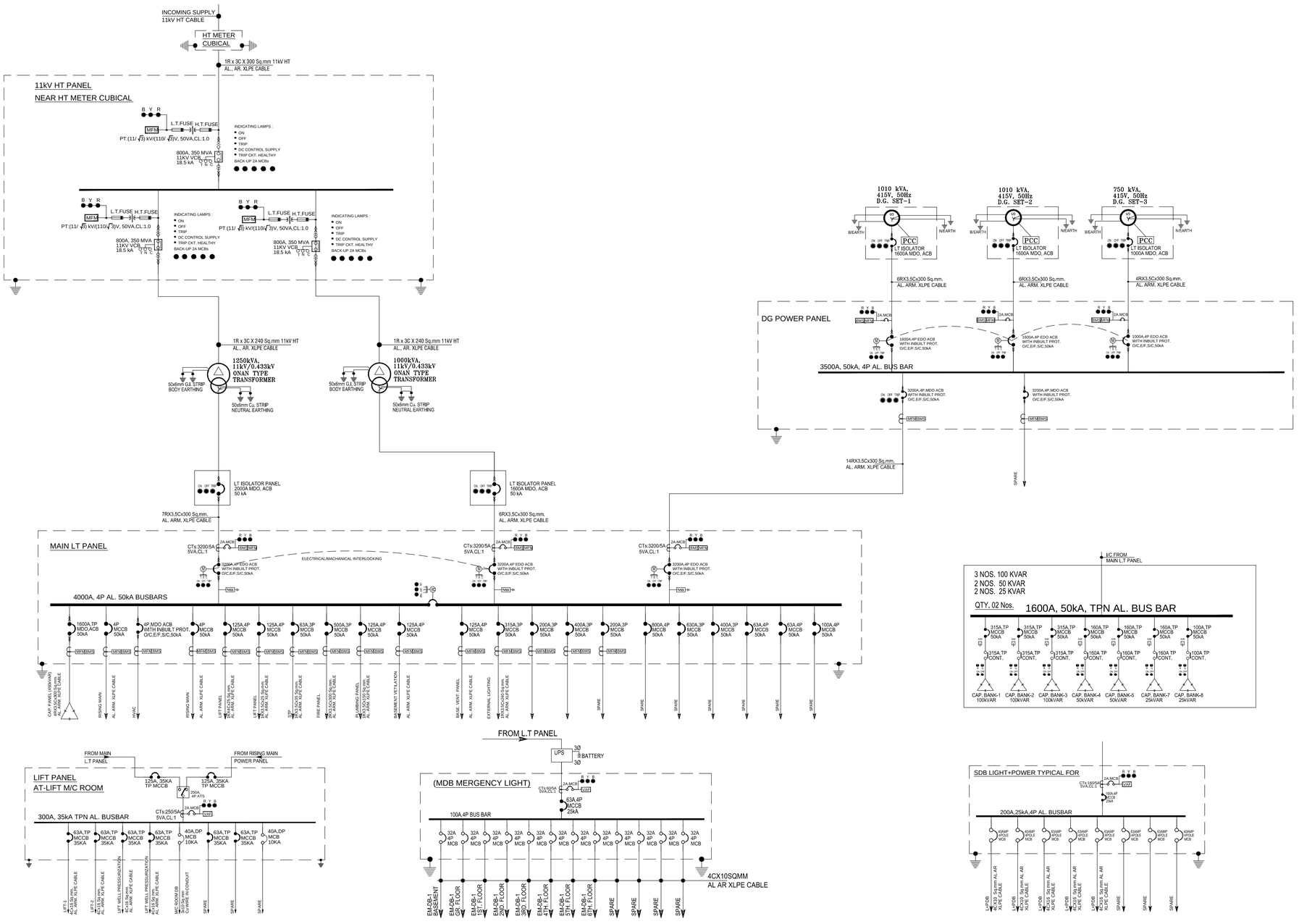

ELECTRICAL LEGENDS :-

S.NO.	SYMBOL	DESCRIPTION
01		EDO AIR CIRCUIT BREAKER
02		MDO AIR CIRCUIT BREAKER
03		MOULDED CASE CIRCUIT BREAKER
04		MINIATURE CIRCUIT BREAKER
05		CAPACITOR BANK
06		VACUUM CIRCUIT BREAKER
07		INDICATING LAMP (LED TYPE)
08		PUSH BUTTON
09		EMERGENCY STOP PUSH BUTTON
10		CONTACTOR
11	V	DIGITAL VOLTMETER WITH IN BUILT SELECTOR SWITCH
12	A	DIGITAL AMMETER WITH IN BUILT SELECTOR SWITCH
13	Hz	FREQUENCY METER
14	PF	POWER FACTOR METER
15	MFM BMS	MULTI-FUNCTION METER WITH RS 485 PORT
16	MFM	MULTI-FUNCTION METER
17	EMT	2-OVER CURRENT & 1-EARTH FAULT RELAY
18	OVR	OVER VOLTAGE RELAY
19	UVR	UNDER VOLTAGE RELAY
20	VAF	VOLTAGE AMP. FREQUENCIES METER
21	RPR	REVERSE POWER RELAY VOLTAGE
22	A/M	AUTO/MANUAL SELECTOR SWITCH
23		POTENTIAL TRANSFORMER
24		CHANGE OVER SWITCH
25		CURRENT TRANSFORMER
26	DOL STARTER	DIRECT ON LINE MOTOR STARTER
27	DELTA STARTER	STAR DELTA MOTOR STARTER
28	AMF	AUTO MAINS FAILURE PANEL
29		
30		

PROJECT

PROPOSED HOTEL AT- KHASRA NO. : 1181(M)&1183(M), VILLAGE NOORNAGAR, GHAZIABAD

DRAWING TITLE
SINGLE LINE DIAGRAM

OWNER'S NAME:

FOR JYOTISUPER CONSTRUCTION HOUSING PVT LTD

ARCHITECT

AR.GAURAV SINGLA
ADRESS:H-169 SEC-63 NOIDA(U.P)
GSINGLA32@GMAIL.COM
MOB.NO. 9971998445

MEP SERVICES CONSULTANT

WeDESIGN Consultants
"Engineered to perfection"
Email - wedesignconsultancy@gmail.com
Mob. - 9999288416, 9999288407, 9882244495

DEALT BY	CHECKED BY	APPROVED BY
SANJU	DINESH	
SCALE	DATE	
NTS	15.12.2020	

DRAWING NUMBER JSV-WD-SLD-01