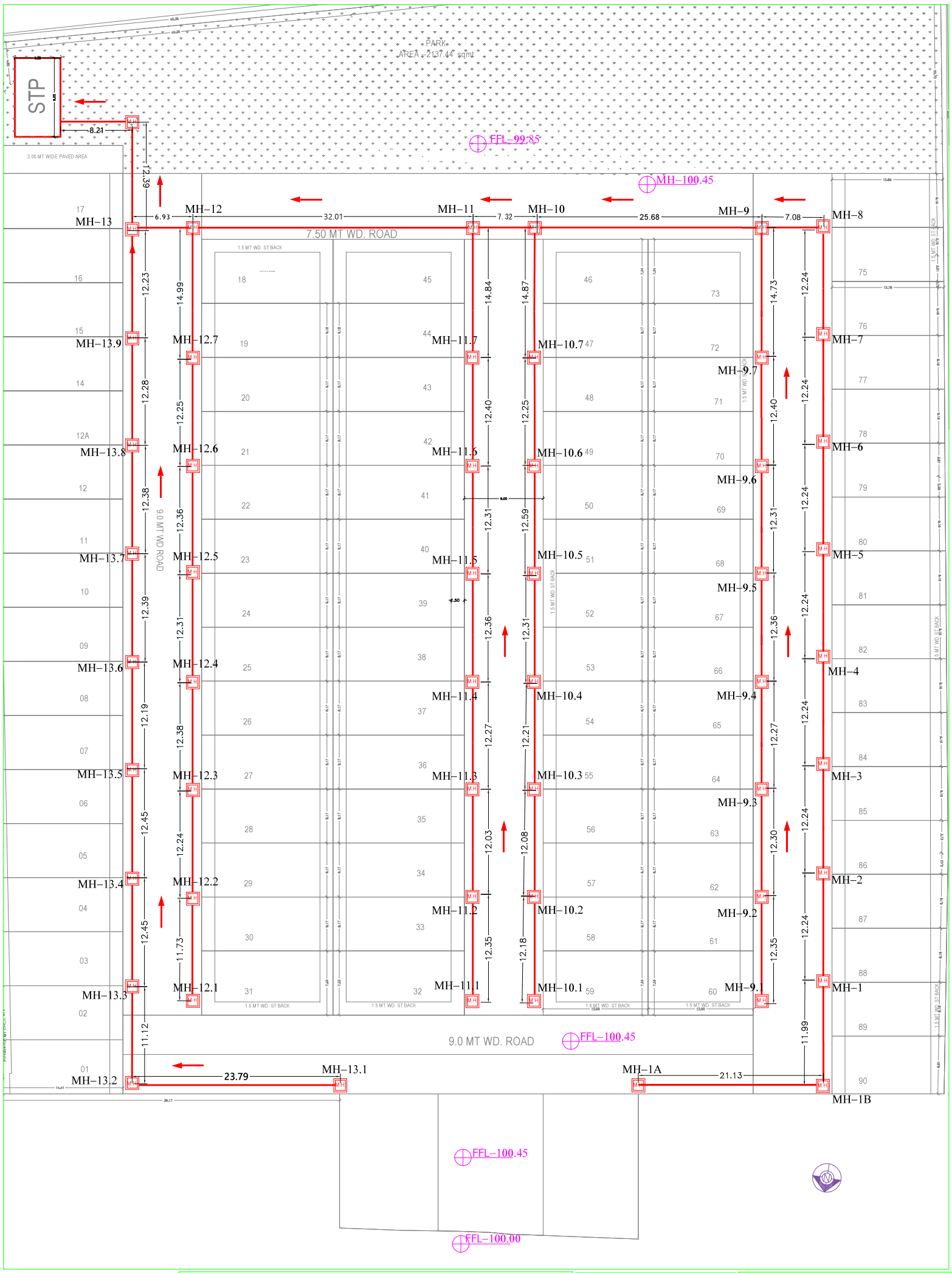

starting point	end point	pipe size in inches	pipe length in meter	level of pipe line at start point	level of pipe line at end in M	slope ratio 1 in
TRUNK LINE						
MH1A	MH-1B	6	21.13	100.000	99.888	189
MH-1B	MH-1	6	11.99	99.888	99.825	189
MH-1	MH-2	6	12.24	99.825	99.760	189
MH-2	MH-3	6	12.24	99.760	99.695	189
MH-3	MH-4	6	12.24	99.695	99.631	189
MH-4	MH-5	6	12.24	99.631	99.566	189
MH-5	MH-6	6	12.24	99.566	99.501	189
MH-6	MH-7	6	12.24	99.501	99.436	189
MH-7	MH-8	6	12.24	99.436	99.372	189
MH-8	MH-9	6	7.08	99.372	99.334	189
MH-9	MH-10	8	25.68	99.334	99.240	272
MH-10	MH-11	8	7.32	99.240	99.213	272
MH-11	MH-12	8	32.01	99.213	99.095	272
MH-12	MH-13	8	6.93	99.095	99.070	272
MH-13	MH-STP	8	12.39	99.070	99.024	272
BRANCH LINE-1 AT MH-						
MH-9.1	MH-9.2	6	12.35	100.000	99.935	189
MH-9.2	MH-9.3	6	12.3	99.935	99.870	189
MH-9.3	MH-9.4	6	12.27	99.870	99.805	189
MH-9.4	MH-9.5	6	12.36	99.805	99.739	189
MH-9.5	MH-9.6	6	12.31	99.739	99.674	189
MH-9.6	MH-9.7	6	12.4	99.674	99.609	189
MH-9.7	MH-9	6	14.73	99.609	99.531	189
BRANCH LINE-2 AT MH-						
MH-10.1	MH-10.2	6	12.18	100.000	99.936	189
MH-10.2	MH-10.3	6	12.08	99.936	99.872	189
MH-10.3	MH-10.4	6	12.21	99.872	99.807	189
MH-10.4	MH-10.5	6	12.31	99.807	99.742	189
MH-10.5	MH-10.6	6	12.59	99.742	99.675	189
MH-10.6	MH-10.7	6	12.25	99.675	99.611	189
MH-10.7	MH-10	6	14.87	99.611	99.532	189
BRANCH LINE-3 AT MH-						
MH-11.1	MH-11.2	6	12.35	100.000	99.935	189
MH-11.2	MH-11.3	6	12.3	99.935	99.870	189
MH-11.3	MH-11.4	6	12.27	99.870	99.805	189
MH-11.4	MH-11.5	6	12.36	99.805	99.739	189
MH-11.5	MH-11.6	6	12.31	99.739	99.674	189
MH-11.6	MH-11.7	6	12.4	99.674	99.609	189
MH-11.7	MH-11	6	14.87	99.609	99.530	189
BRANCH LINE-4 AT MH-						
MH-12.1	MH-12.2	6	11.73	100.000	99.938	189
MH-12.2	MH-12.3	6	12.24	99.938	99.873	189
MH-12.3	MH-12.4	6	12.38	99.873	99.808	189
MH-12.4	MH-12.5	6	12.31	99.808	99.743	189
MH-12.5	MH-12.6	6	12.36	99.743	99.677	189
MH-12.6	MH-12.7	6	12.25	99.677	99.612	189
MH-12.7	MH-12	6	14.99	99.612	99.533	189
BRANCH LINE-5 AT MH-						
MH-13.1	MH-13.2	6	23.79	100.000	99.874	189
MH-13.2	MH-13.3	6	11.2	99.874	99.815	189
MH-13.3	MH-13.4	6	12.45	99.815	99.749	189
MH-13.4	MH-13.5	6	12.45	99.749	99.683	189
MH-13.5	MH-13.6	6	12.19	99.683	99.619	189
MH-13.6	MH-13.7	6	12.39	99.619	99.553	189
MH-13.7	MH-13.8	6	12.38	99.553	99.488	189
MH-13.8	MH-13.9	6	12.34	99.488	99.422	189
MH-13.9	MH-13	6	12.38	99.422	99.357	189

NOTES-

- THE SEWER LINE SHALL BE LAID ON P.C.C. (150THK) OVER COMPACTED EARTH.
- SEWER LINE SHALL BE TESTED FOR ITS LEAKAGE/ INFILTRATION AS RELEVANT IS CODE/MANUAL BEFORE ITS COMMISSIONING.
- ALL MANHOLES SHOULD HAVE UNCUT PIPE INSIDE AT BASE WHICH SHALL BE CUT DURING COMMISSIONING.
- THE MINIMUM INVERT LEVEL SHALL BE 500 MM BELOW EXISTING GROUND.
- MAXIMUM DISTANCE BETWEEN TWO MANHOLES SHALL BE AS PER THE GIVEN TABLE OR AS PER DESIGN.
- DROP MANHOLE SHALL BE PROVIDED WHERE THE DIFFERENCE OF TWO INVERT LEVEL AT A JOINT IS MORE THAN 600 MM.
- ALL PIPES USED UPTO DIAMETER 160MM SHOULD BE SWR CONFORMING TO IS 13592:92 & FITTINGS SHOULD CONFORM TO IS 14735:99 & DIAMETER MORE THAN 160MM SHOULD BE uPVC PRESSURE PIPES & CONFORM TO IS 4985:2000 CLASS B.
- THE WIDTH/DIAMETER OF THE MANHOLE SHOULD NOT BE LESS THAN INTERNAL DIAMETER OF THE SEWER + 150MM BENCHING ON BOTH SIDES (150MM + 150MM).
- MANHOLES SHOULD BE BUILT AT EVERY CHANGE OF ALIGNMENT , GRADIENT OR DIAMETER, AT THE HEAD OF ALL SEWERS & BRANCHES & AT EVERY JUNCTION OF TWO OR MORE SEWERS.
- ON SEWERS WHICH ARE TO BE CLEANED MANUALLY, WHICH CANNOT BE ENTERED FOR CLEANING OR INSPECTION, THE MAXIMUM DISTANCE BETWEEN MANHOLES CAN BE AT 30M MAXIMUM.

LOCATION OF HOUSE CONNECTION MANHOLE ARE INDICATIVE ONLY, FINAL LOCATION IS TO BE DETERMINE BY SITE ENGINEER AS PER THE INTERNAL PLUMBING OF SAID HOUSE

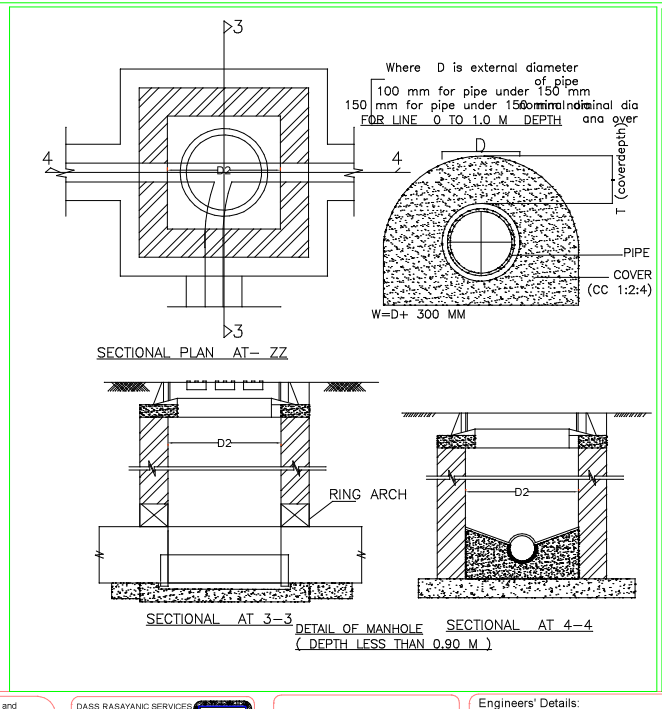

DETAIL OF MANHOLE
(DEPTH LESS THAN 0.90 M)

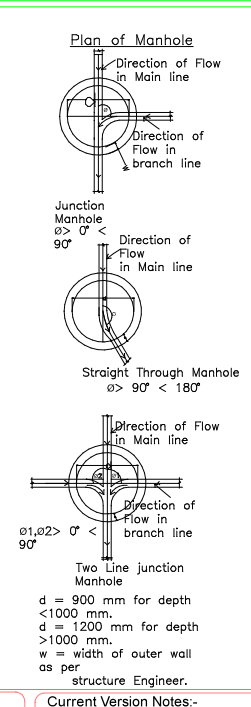

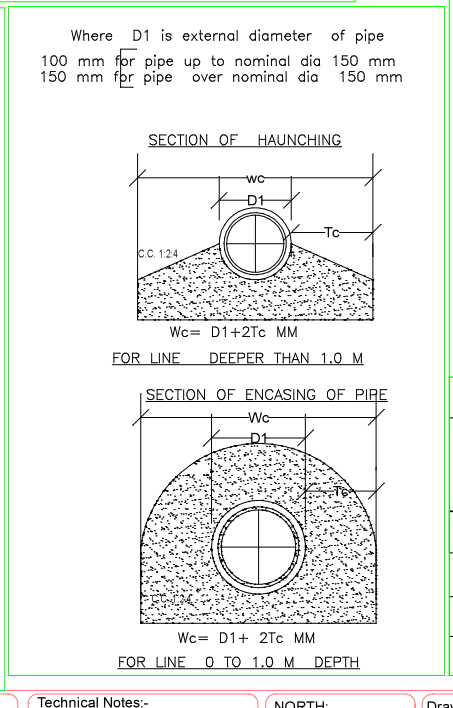

Width of Manhole		
S. No.	Depth	Width
1.	Upto 800 mm	600 x 600
2.	0.8 And Upto 2.5 m	600 x 1200

LEGEND	
	Sewer Line (DWC SN-4 Cass pipe with Integral socket confirming to IS 16098, Size As Per DWG.)
	Mainhole
MH 1	Mainhole No.
SL 1	Starting line No.
	Flow Direction

This drawing and/or its contents,information, and principles of design are the exclusive property of Dass Rasayanic Services, Agra and is submitted to you with the agreement that it is not to be reproduced in any manner, copied, or modified, nor is it to be relayed in part or in whole to any other firm or individual for any other project except by written agreement with DASS RASAYANIC SERVICES

DASS RASAYANIC SERVICES
(An ISO 9001:2008 Company)
(An ISO 14001:2008 Company)
#441,H.I.G., Sector - 16, Sikandra Awas Yojna, Sikandra
Agra- 282007 (U.P.)
Phone & Fax: +91-562-2641866 (4)
mail - info@wateronline.co.in, drs@wateronline.co.in
web - www.wateronline.co.in

SHEET DETAILS :

Sheet No.	Sheet Size :	Version:
1	A1	V3

Engineers' Details:
Drawn By:- NISHANT HEERA
Design Engineer - PHE
Checked By:- DINKAR SAXENA

Current Version Notes:-

Technical Notes:-

NORTH:

Drawing Title: Sewer layout

Project Name: DWARIKA GALAXY

Signature(Issued By):

For engineering details please refer to see attached calculations.All structural detail are suggestive in nature and are need to haverevision by structural engineers.

PURPOSE OF DRAWING : Tender | Approval | G.F.C.

Signature (Drawn By):

Drawing Number:- DRS-D-353-21

Date:- 28-09-2021

Client's Name: RADHIKA BUILD TECH

Version Details:- Version No:- Ver- 2
Date Of Version:-

Description:- Sewer Layout

Previous Version No. & Date:-
Ver- 1
Version Notes:

Previous Version No. & Date:-
Version Notes:

Previous Version No. & Date:-
Version Notes:

CONSULTANT :-
DINKAR SAXENA
M.Sc., M.I.E., C.Eng., F.I.P.H.E.
CHARTERED ENGINEER