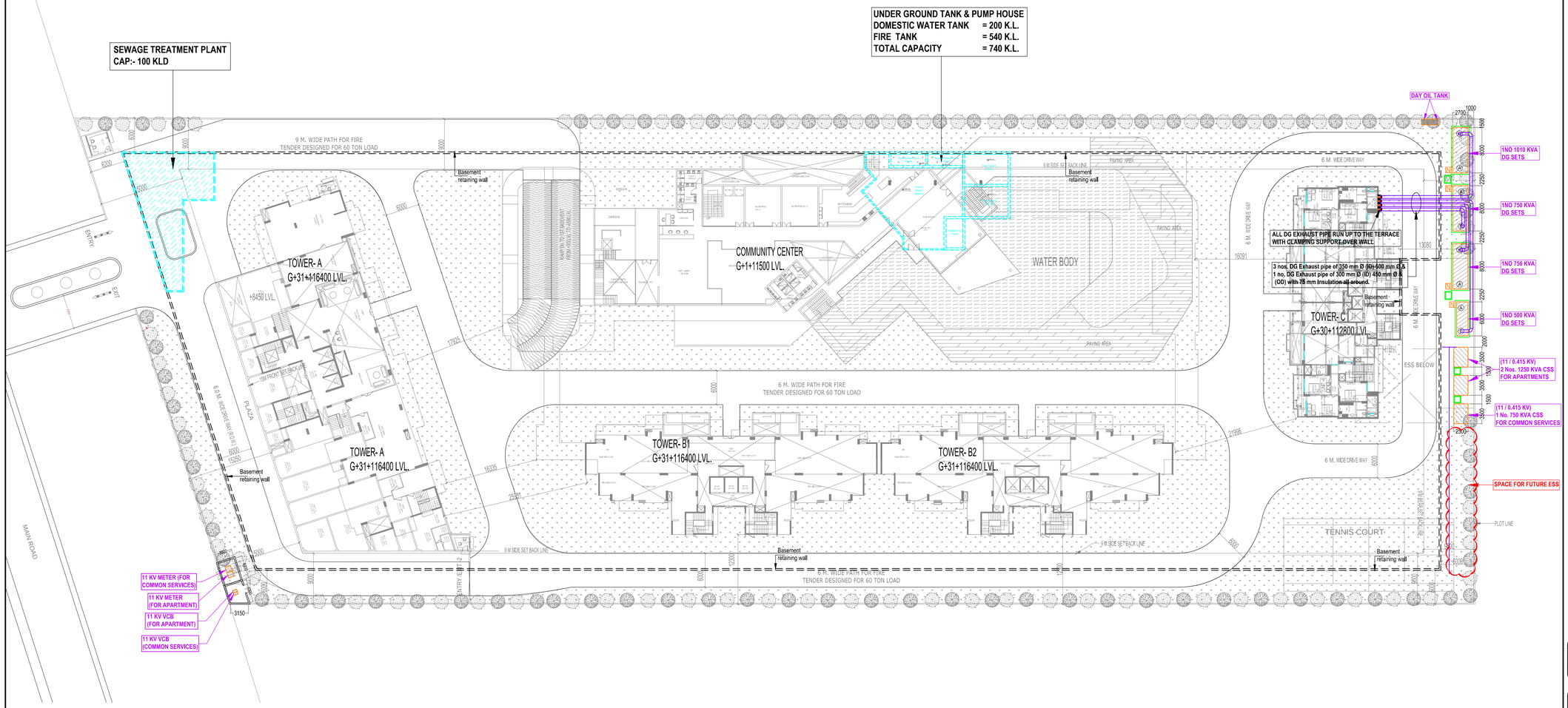

rev. no.	date	revision
--	--	--

project
PROP. GROUP HOUSING "IVY COUNTY"
ACE INFRACITY DEVELOPERS PVT. LTD.
AT PLOT NO: GH-01/A/B(ALPHA),SECTOR -107, NODIA,UP

title
SITE PLAN

subtitle
ELECTRICAL SETTING OUT PLAN

drawing released for
- ☐ APPROVAL
- ■ RERA SUBMISSION
- ☐ ADVANCE COPY
- ☐ CONSTRUCTION

drg. no. IVY / MUN. / ES - E / 01
drawn by Baldev
scale 1:400 @ A1
designed by Sanjay Goel
date December 2018
checked by Anand Havelia

architects
B- 421,NEW FRIENDS COLONY,N.D-65 INDIA
Ph- +91-11-46130600, Ph- +91-11-40564768
www.inconfluence.com
Member of IGBC. ISO - 9001 : 2000
Confluence

services consultant
Consummate Engineering Services (P) Ltd.
cespl
Noida Office : B - 67, Sector - 67, Noida - 201 301
Lko. Office : R 006, Rohtas Plumeria, Gomti Nagar, Lucknow
Tel : (0120) 2303500 (24 Lines)
e mail : mail@cespl.in, website : www.cespl.in

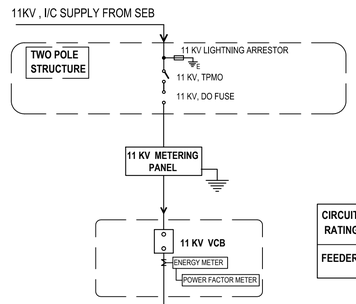

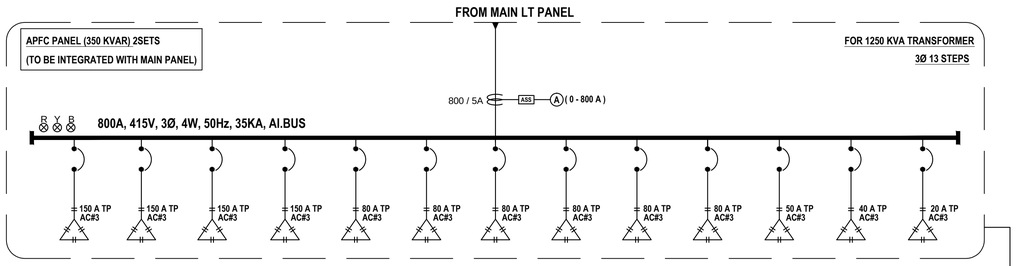

CIRCUIT BREAKER RATING IN AMPS	125 A TP MCCB (35 KA)	125 A TP MCCB (35 KA)	125 A TP MCCB (35 KA)	125 A TP MCCB (35 KA)	63 A TP MCCB (35 KA)	63 A TP MCCB (35 KA)	63 A TP MCCB (35 KA)	63 A TP MCCB (35 KA)	63 A TP MCCB (35 KA)	63 A TP MCCB (35 KA)	40 A TP MCCB (35 KA)	32 A TP MCCB (35 KA)	16 A TP MCCB (35 KA)
FEEDER DESCRIPTION	BANK-1 50 KVAR	BANK-2 50 KVAR	BANK-3 50 KVAR	BANK-4 50 KVAR (Space only)	BANK-5 25 KVAR	BANK-6 25 KVAR	BANK-7 25 KVAR	BANK-8 25 KVAR	BANK-9 25 KVAR (Space only)	BANK-10 20 KVAR	BANK-11 15 KVAR	BANK-12 10 KVAR	BANK-13 5 KVAR

TO CONNECT MAIN EARTH GRID BY 2 nos 50 X 6 MM GI STRIP

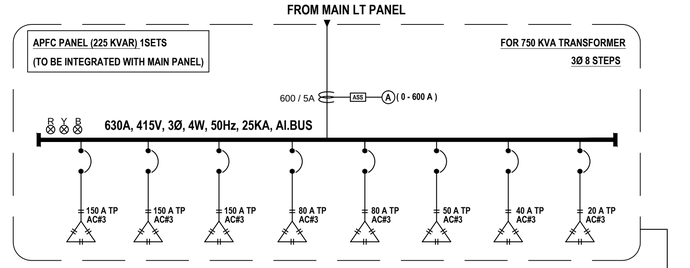

CIRCUIT BREAKER RATING IN AMPS	125 A TP MCCB (25 KA)	125 A TP MCCB (25 KA)	125 A TP MCCB (25 KA)	63 A TP MCCB (25 KA)	63 A TP MCCB (25 KA)	40 A TP MCCB (25 KA)	32 A TP MCCB (25 KA)	16 A TP MCCB (25 KA)
FEEDER DESCRIPTION	BANK-1 50 KVAR	BANK-2 50 KVAR	BANK-3 50 KVAR (Space only)	BANK-4 25 KVAR	BANK-5 20 KVAR	BANK-6 15 KVAR	BANK-7 10 KVAR	BANK-8 5 KVAR

TO CONNECT MAIN EARTH GRID BY 2 nos 50 X 6 MM GI STRIP

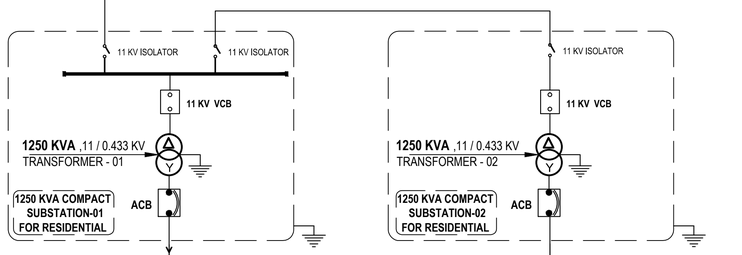

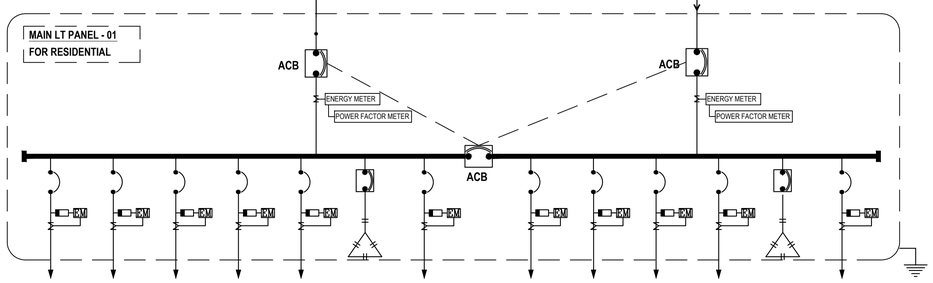

FEEDER NUMBER	F - 1	F - 2	F - 3	F - 4	F - 5	F - 6	F - 7
FEEDER DESCRIPTION	BLOCK-A-1	BLOCK-A-2	BLOCK-B1-1	BLOCK-B1-2	COMMERCIAL	CAP. PANEL 01 (375 KVAR)	SPARE

F - 8	F - 9	F - 10	F - 11	F - 12	F - 13
BLOCK-B2-1	BLOCK-B2-2	BLOCK-C-1	BLOCK-C-2	CAP. PANEL 02 (375 KVAR)	SPARE

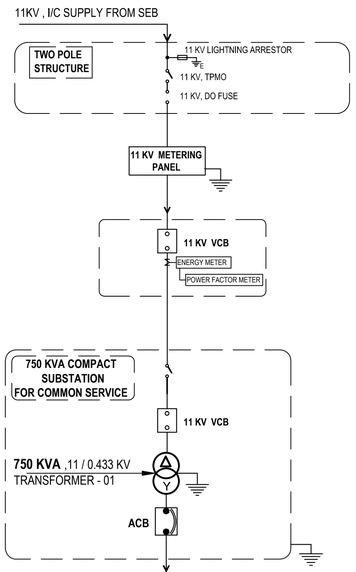

LEGENDS	
SYMBOLS	DESCRIPTION
	DG SET
	11 KV VCB CIRCUIT BREAKER
	AIR CIRCUIT BREAKER
	HRC FUSES
	MOULDED CASE CIRCUIT BREAKER
	POTENTIAL TRANSFORMER
	CURRENT TRANSFORMER
	M.C.B. (MINIATURE CIRCUIT BREAKER)
EM	ENERGY METER
	ISOLATOR

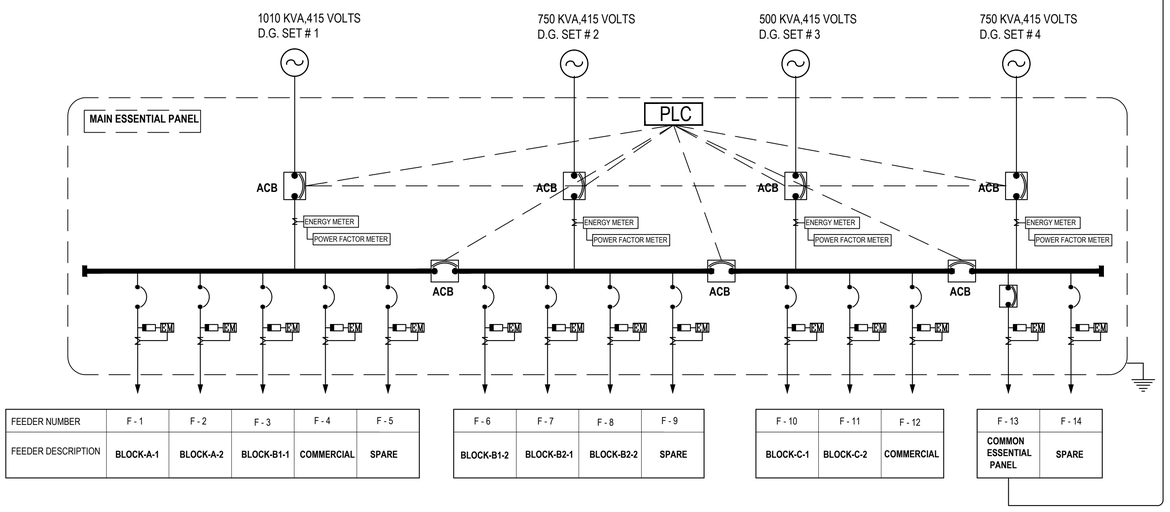

FEEDER NUMBER	F - 1	F - 2	F - 3	F - 4	F - 5
FEEDER DESCRIPTION	BLOCK-A-1	BLOCK-A-2	BLOCK-B1-1	COMMERCIAL	SPARE

F - 6	F - 7	F - 8	F - 9
BLOCK-B1-2	BLOCK-B2-1	BLOCK-B2-2	SPARE

F - 10	F - 11	F - 12
BLOCK-C-1	BLOCK-C-2	COMMERCIAL

F - 13	F - 14
COMMON ESSENTIAL PANEL	SPARE

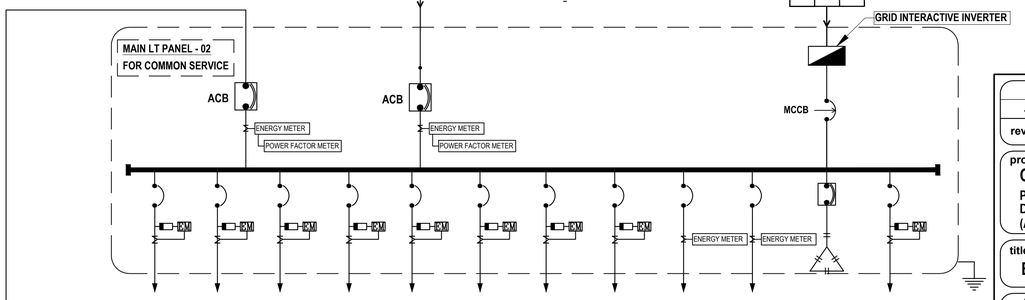

FEEDER NUMBER	F - 1	F - 2	F - 3	F - 4	F - 5	F - 6	F - 7	F - 8	F - 9	F - 10	F - 11	F - 12
FEEDER DESCRIPTION	COMMON SER. PANEL-01 BLOCK-A	COMMON SER. PANEL-02 BLOCK-B1	COMMON SER. PANEL-03 BLOCK-B2	COMMON SER. PANEL-04 BLOCK-C	CLUB / COMMUNITY	BASEMENT VENTILATION-1	BASEMENT VENTILATION-2	FIRE PANEL	RECYCLE WATER SUPLY	WATER SUPPLY PUMP	CAP. PANEL (225 KVAR)	SPARE

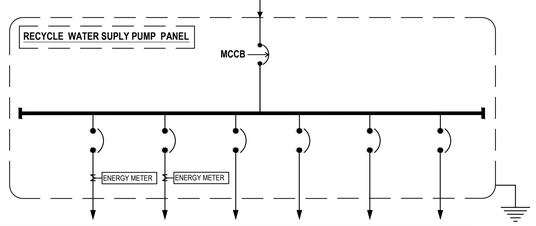

FEEDER NUMBER	F - 1	F - 2	F - 3	F - 4	F - 5	F - 6
FEEDER DESCRIPTION	RECYCLE WATER SUPLY PUMP	IRRIGATION PUMP	SPARE	SPARE	SPARE	SPARE

rev. no.	date	revision
...	...	...

project
COUNTY ONE O SEVEN
PROPOSED GROUP HOUSING FOR ACE INFRACITY DEVELOPERS PVT. LTD. AT PLOT NO: GH - 01/A/B (ALPHA),SECTOR -107, NODIA, UP.

title
ELECTRICAL DRAWING

subtitle
MAIN SCHEMATIC DIAGRAM

drawing released for
- ☐ APPROVAL
- ■ RERA SUBMISSION
- ☐ ADVANCE COPY
- ☐ CONSTRUCTION

drg. no. COOS / ELEC / EXT - 02
drawn by Surjeet
scale N.T.S. @ A1
designed by Ateeq Ur Rehman
date Oct. 2018
checked by Anand Havelia

architects
B- 421,NEW FRIENDS COLONY,N.D-65 INDIA
Confluence

services consultant
Consummate Engineering Services (P) Ltd.
cespl
Noida Office : B - 67, Sector - 67, Noida - 201 301
Tel : (0120) 6943500 (24 Lines)
Lko. Office : R 006, Rohtas Plumeria, Gomti Nagar, Lucknow
e mail : mail@cespl.in, website : www.cespl.in