Project Title :PROPOSED REVISED LAYOUT WITH MINOR CORRECTION AGAINST PREVIOUS SANCTION LAYOUT PERMIT NO. 2018081816272281 0 DATED- 07-03-2019 (GHAILA TOWNSHIP) Village: Ghaila & Alinagar, Lucknow for Shalimar KSMB Village Ghaila, Khasra No:- 2,3,4,5,6,7,12,13,14,23,24,25,27,31,32,87,88,89,89/1594,90Ka,91Ka,91Kha,91Ga,91Gha,92,93,94,95,96,97,108,110,114,115,115/1553,116,117,119Ka,120,121Ka,121Kha,122,123,124Ka,124Kha,181,182,183,184,191,192,195,195/1546,200,201,202,203,204,206,207,209,212,213,214,215,216,217,219,230,231,234,235,236,239,240Sa,Village Ali Nagar, Khasara No:- 5,23,25,26,27,29,35,36,37,39,41,45,46,48(PREVIOUS SANCTIONED PLOTTED RESI DEVELOPMENT / PLOTTED HOUSING/03660/LDA/LD/20-21/2742/29112021 DATED 11 MAR 2022)

Title :	LDA/LD/20-21/2277	Sheet	4
Creation Date :	2022-06-13	Scale	1:150

SITE PLAN LAND SCPE & SERVICES PLAN

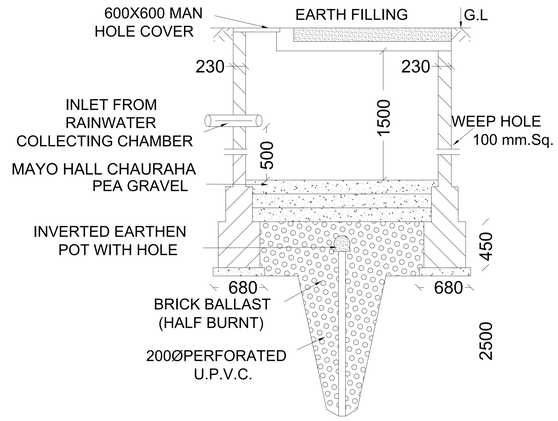

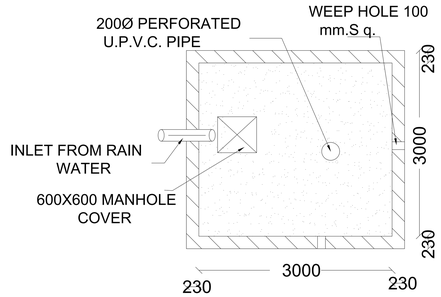

PLAN

WATER RECHARGING PIT

(NOT TO SCALE)

(6.0 MT. DEEP)

Garden Bay

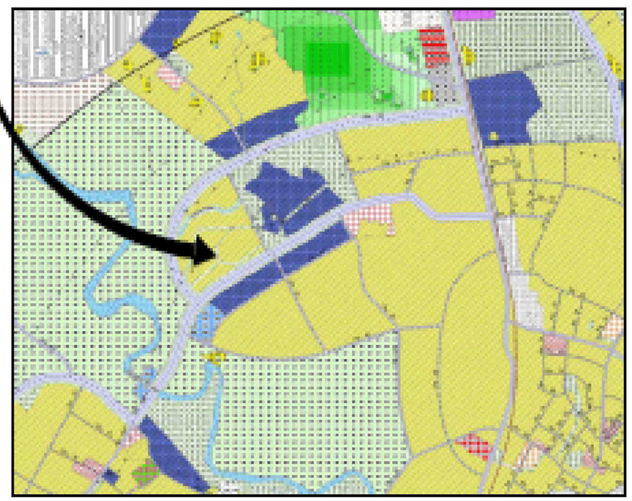

LUCKNOW MASTER PLAN 2031

OWNER'S NAME AND SIGNATURE

SHALIMAR KSMB
PROJECT,ARCHITECT@SHALIMAR ORG,7310180003

ARCHITECT'S NAME AND SIGNATURE | STRUCTURE ENGINEER

SADHANAND KUMAR
CA/2011/53008
Lucknow Development Authority

Building Plan Application Number
LDA/LD/22-2345277

Sanctioned On
14 Jul 2022

Valid Till
15 Jul 2027

Approved By
Vice Chairman (Vice Chairman)

Examined By
Rajesh Sharma (Junior engineer)
Shiv Kumar (Junior engineer)
Nagendra Singh (Assistant Engineer)
Bhupendra Veer Singh (Executive engineer)
Nitin Mittal (Chief Town Planner)
Pawan kumar Gangwar (Secretary)

Note: - 1) This drawing is prepared as per the current prevailing Building Bye Laws.
2) If Map sanctioned is used for purpose anything other than stated in application will lead to rejection of Map.

Total Plot Area : -	12417.05	Total FAR Area : -	0
Total Coverage Area : -	0	Total BUA Area : -	0

DCO_1LF_3dwarf_6AD_[1682.00_x_2378.00_MM]

The correctness and accuracy of Proposed Information and drawing is a responsibility of PO/Owner. Accuracy of Scrutiny Report is subject to accuracy of entered user provided data. 3rd party software/hardware/server etc. SMPLR Engineers Ltd. is not liable for any damages which may arise from use. Liability to use the Application, Tools provided in Native and Blue Print data can vary widely, which are not verified and not governed by scrutiny software.

Project Title :PROPOSED REVISED LAYOUT WITH MINOR CORRECTION AGAINST PREVIOUS SANCTION LAYOUT PERMIT NO. 2018061816272281 0 DATED- 07-03-2019 (GHAILA TOWNSHIP) Village: Ghaila & Alinagar, Lucknow for Shalimar KSMB Village Ghaila, Khasra No:- 2,3,4,5,6,7,12,13,14,23,24,25,27,31,32,87,88,89,89/1594,90Ka,91Ka,91Kha,91Ga,91Gha,92,93,94,95,96,97,108,110,114,115,115/1553,116,117,119Ka,120,121Ka,121Kha,122,123,124Ka,124Kha,181,182,183,184,191,192,195,195/1546,200,201,202,203,204,206,207,209,212,213,214,215,216,217,219,230,231,234,235,236,239,240Sa,Village Ali Nagar, Khasara No:- 5,23,25,26,27,29,35,36,37,39,41,45,46,48(PREVIOUS SANCTIONED PLOTTED RESI DEVELOPMENT / PLOTTED HOUSING/03660/LDA/LD/20-21/2742/29112021 DATED 11 MAR 2022)

Title :	LDA/LD/20-21/2277	Sheet	1
Sheet Size	750.00 x 594.00	Scale	1:150

LEGEND :-

- DRAIN
- WATER LINE
- ELEC.LINE
- SEWER LINE
- RAIN WATER HARVESTING — R. WH
- RAIN WATER HARVESTING — STP 850

Project Title :PROPOSED REVISED LAYOUT WITH MINOR CORRECTION AGAINST PREVIOUS SANCTION LAYOUT PERMIT NO. 2018061816272281 0 DATED- 07-03-2019 (GHAILA TOWNSHIP)

Village: Ghaila & Alinagar, Lucknow for Shalimar KSMB — Village Ghaila, Khasara No:- 2,3,4,5,6,7,12,13,14,23,24,25,27,31,32,87,88,89,89/1594,90Ka,91Ka, 91Kha,91Ga,91Gha,92,93,94,95,96,97,108,110,114,115,115/1553,116,117,119Ka,120,121Ka,121Kha,122,123,124Ka,124Kha,181,182,183,184,191,192,195,195/1546,200,201,202,203,204,206,207,209,212,213,214,215,216,217,219,230,231,234,235,236,239,240Sa.

Village Ali Nagar, Khasara No:- 5,23,25,26,27,29,35,36,37,39,41,45,46,48

DWG TITLE			
DRAWN BY			
DATE	DD-MM-YYYY	SHEET	DATE
SCALE	1:150	1 of 1	

DWG NO/ SHEET NO

DIRECTOR PLAN 20/07/22

Total Plot Area :- 124117.05	Total FAR Area :- 0
Total Coverage Area :- 0	Total BUA Area :- 0

DIRECTS NAME AND SIGNATURE

DHILBAR KUMAR
PROJECT ARCHITECT(GHAILIMAR ORL)7101188003

ARCHITECTS NAME AND SIGNATURE — STRUCTURE ENGINEER

SHUBHAME KUMAR
CA/2012/50868
Flat No. 102, Ground Floor,
Gulab Vatika Apartment,
Near Jain Mandir Lane,
Ashiyana Colony,
Lucknow - 226012

Lucknow Development Authority

Building Plan Application Number
LDA/LD/21-2340277

Sanctioned On
14 Jul 2022

Valid Till
17 Jul 2027

Approved By
Vice Chairman (Vice Chairman)

Examined By
Rajesh Sharma (Junior engineer)
Shiv Kumar (Junior engineer)
Nagendra Singh (Assistant Engineer)
Bhupendra Veer Singh (Executive engineer)
Nitin Mittal (Chief Town Planner)
Pawan kumar Gangwar (Secretary)

Note: - 1) This drawing is prepared as per the current prevailing Building Bye Laws.
2) If Map sanctioned is used for purpose anything other than stated in application will lead to rejection of Map.

ISO_full_3dedd_4A0_(1682.00_x_2378.00_MM)

The correctness and accuracy of Proposed Information and drawing is a responsibility of PO/Owner. Accuracy of Scrutiny Report is subject to accuracy of end-user provided data. 3rd party software/hardware/services, etc. SoftTech Engineers Ltd. is not liable for any damages which may arise from use, or inability to use the Application. Tools printed in Yellow and Blue color are user inputs, which are not verified and not generated by scrutiny software.