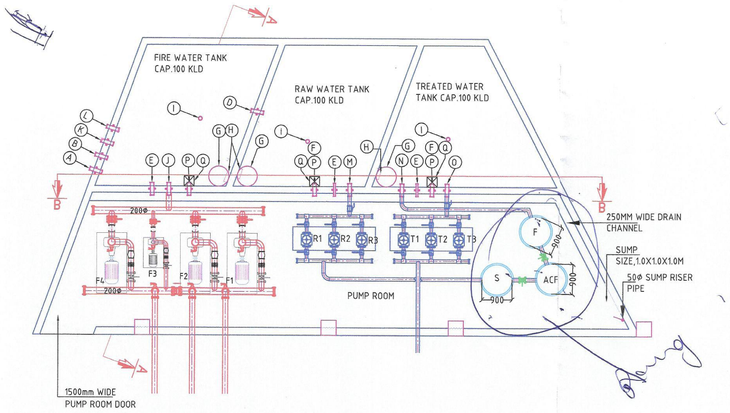

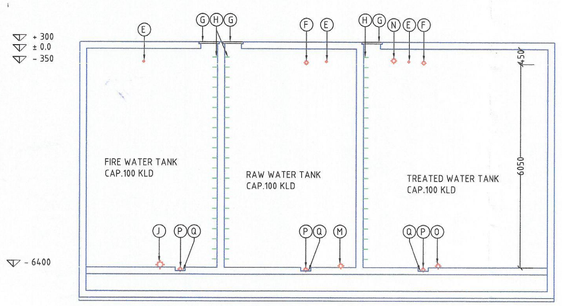

SECTION-BB

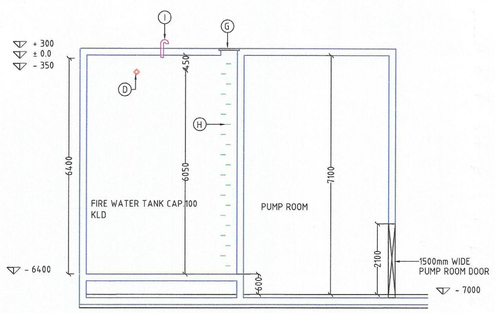

SECTION-AA

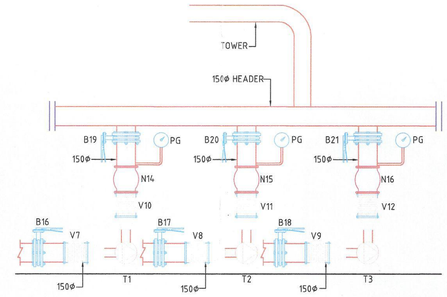

TREATED WATER PUMP

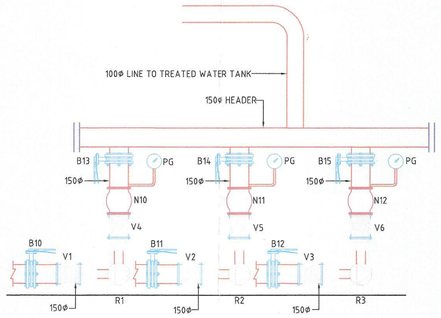

RAW WATER PUMP

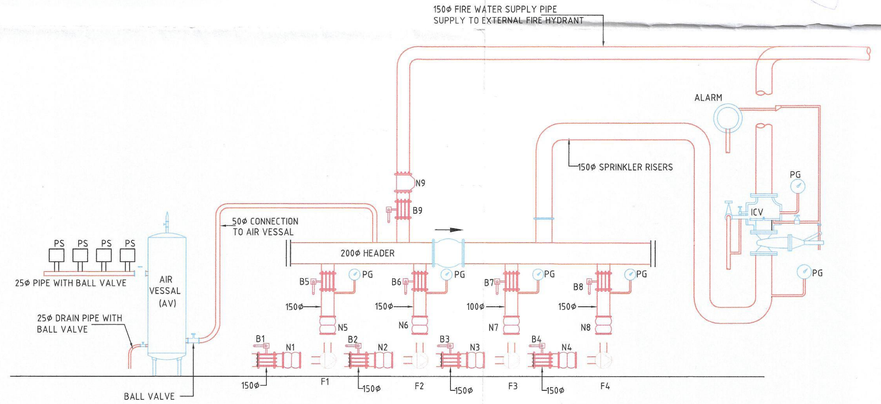

LEGEND:-

BOTTOM OF TANK LVL IS = -6400

S.No.	INSERTS	DESCRIPTION	DIA/SIZE (MM)	BOTTOM LEVELS OF PIPE (MM)
1.	A	WATER INLET PIPE TO FILL UG TANK	80	-250
2.	B	MUNICIPAL WATER INLET PIPE	50	-250
3.	D	TANK TO TANK OVER FLOW PIPE	100	-450
4.	E	LIQUIT LEVEL CONTROLER CABLE ENTRY	50	-250
5.	F	OVER FLOW PIPE FROM TANK	100	-350
6.	G	MANHOLE COVER	600 DIA	TOP OF SLAB
7.	H	FOOT REST	300X300	ON RCC WALL
8.	I	VENT PIPE	80	TOP OF SLAB
9.	J	FIRE WATER OUTLET PIPE	150	-6400
10.	K	FIRE BRIGADE INLET PIPE	150	-250
11.	L	FIRE BRIGADE OUTLET PIPE	150	-250
12.	M	RAW WATER OUTLET PIPE	100	-6400
13.	N	TREATED WATER INLET PIPE	100	-250
14.	O	TREATED WATER OUTLET PIPE	100	-6400
15.	P	DRAIN OUT PIPE	80	-6500
16.	Q	SUMP (300X300X100 DEPTH)	—	—
17.	F1	DIESEL ENGINE DRIVEN PUMP (FIRE) CAP.~~2280~~ LPM 2800 LPM		
18.	F2	ELECTRICAL HYDRANT PUMP (FIRE) CAP.~~2280~~ LPM 2800 LPM		
19.	F3	JOCKEY PUMP (FIRE) CAP.,180 LPM		
20.	F4	ELECTRICAL SPRINKLER PUMP (FIRE) CAP.~~2280~~ LPM 2800 LPM		
21.	T1,T2,T3	TREATED WATER PUMP (2 WORKING+1 STANDBY)		
22.	R1,R2,R3	RAW WATER PUMP (2 WORKING+1 STANDBY)		

SCHEDULE OF EQUIPMENT

1.	B1,B2,B4	BUTTERFLY VALVES AT FIRE SUCTION	150mm
2.	N1,N2,N4	NON RETURN VALVES AT FIRE SUCTION	150mm
3.	B3	BUTTERFLY VALVES AT FIRE SUCTION	150mm
4.	N3	NON RETURN VALVES AT FIRE SUCTION	150mm
5.	B5,B6,B8	BUTTERFLY VALVES AT FIRE DELIVERY	150mm
6.	B7	BUTTERFLY VALVES AT FIRE DELIVERY	100mm
7.	N4,N5,	NON RETURN VALVES AT FIRE DELIVERY	150mm
8.	N7	NON RETURN VALVES AT FIRE DELIVERY	100mm
9.	B9	BUTTERFLY VALVES AT FIRE HYDRANT DELIVERY	150mm
10.	N9	NON RETURN VALVES AT FIRE HYDRANT DELIVERY	150mm
11.	B10,B11,B12	BUTTERFLY VALVES AT RAW WATER SUCTION	150mm
12.	B13,B14,B15	BUTTERFLY VALVES AT RAW WATER DELIVERY	150mm
13.	N10,N11,N12	NON RETURN AT RAW WATER DELIVERY	150mm
14.	V1, V2,V3	VIBRATION ELIMINATION AT RAW WATER SUCTION	150mm
15.	V4, V5,V6	VIBRATION ELIMINATION AT RAW WATER DELIVERY	100mm
16.	V7, V8,V9	VIBRATION ELIMINATION AT TREATED WATER SUCTION	150mm
17.	V10,V11,V12	VIBRATION ELIMINATION AT TREATED WATER DELIVERY	150mm
18.	B16,B17,B18	BUTTERFLY VALVES AT TREATED WATER SUCTION	150mm
19.	B19,B20,B21	BUTTERFLY VALVES AT TREATED WATER DELIVERY	150mm

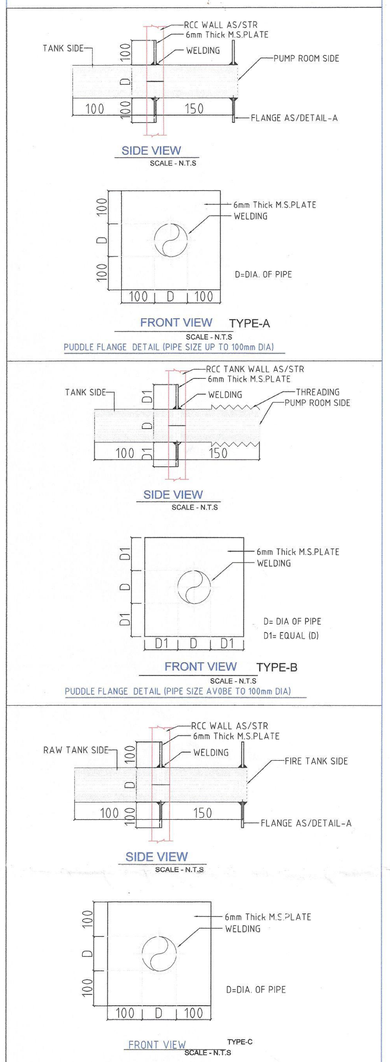

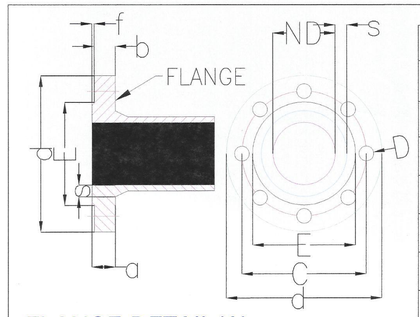

FLANGE DETAIL(A)

TABLE

NOMINAL DIA	DIMENSIONS IN mm							HOLES		BOLT SIZE
ND	d(Φ)	E(Φ)	C	b	f	a	s	NO.	DIA(D)	METRIC
80	200	132	160	19	3	30	15	8	19	M16
100	235	156	190	19	3	33	15	8	23	M20
150	300	211	250	20	3	40	16	8	28	M24
200	360	274	310	22	3	44	17.5	12	28	M24
250	425	330	370	24.5	3	49	19.5	12	31	M27

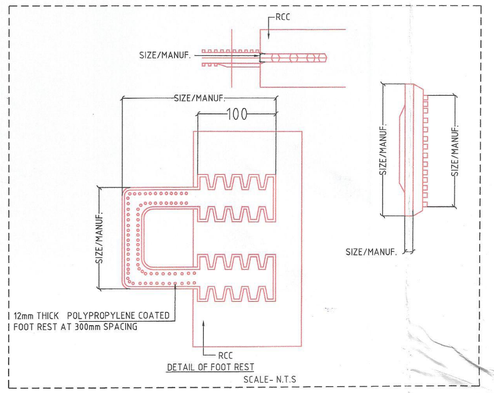

GOOD FOR CONSTRUCTION
17/7/17

REV.	DATE	DESCRIPTION	APPD.	CKD.	SIGN.

WORKING DRAWING

PROJECT:-

GROUP HOUSING FOR
TOWNPARK BUILDCON (P) LTD.
PLOT NO. GC-3C,GH-3,
SECTOR-16C
NOIDA EXTENSION (U.P.)

DRG. TITLE:-
UNDER GROUND TANK DETAIL

NORTH

SCALE:-1:90 | DRG. NO.:-UG-PL-01

DLT.BY.:-KAMAL | DATE:-16/07/2017

ARCHITECTS:-
ANDLEYS ASSOCIATES PVT.LTD.
ARCHITECTS ENGINEERS PLANNERS
39 HOUSING SOCIETY N.D.S.E.-I NEW DELHI - 110049

PLUMBING & FIRE FIGHTING CONSULTANTS :-

PEE CONSULTANTS
815-C, EAST OF LONI ROAD
SHAHADRA, DELHI-110093
PH: 011-22816297,22815897
EMAIL: pdss_in@yahoo.com,nrcons@gmail.com