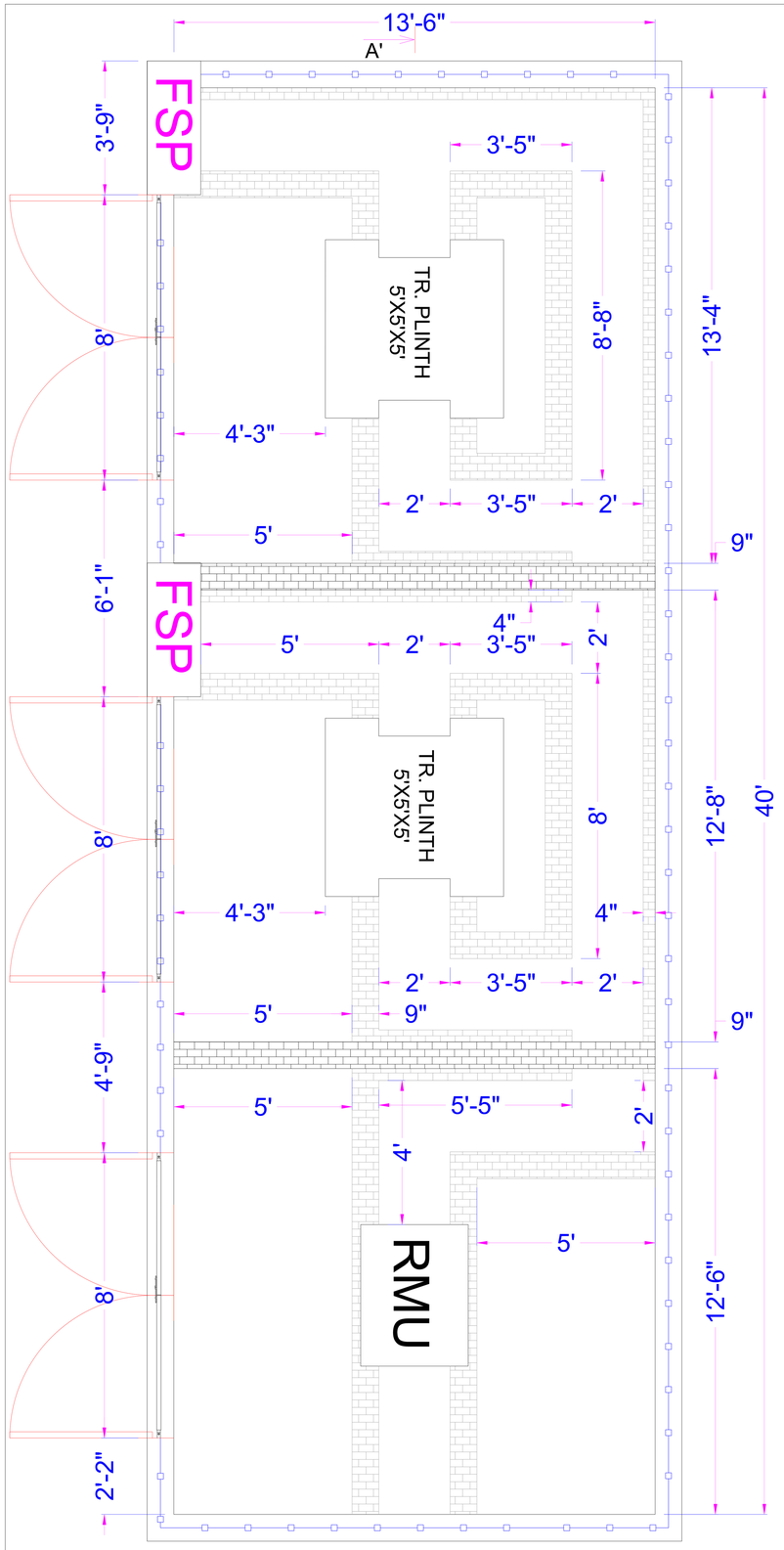

PLAN

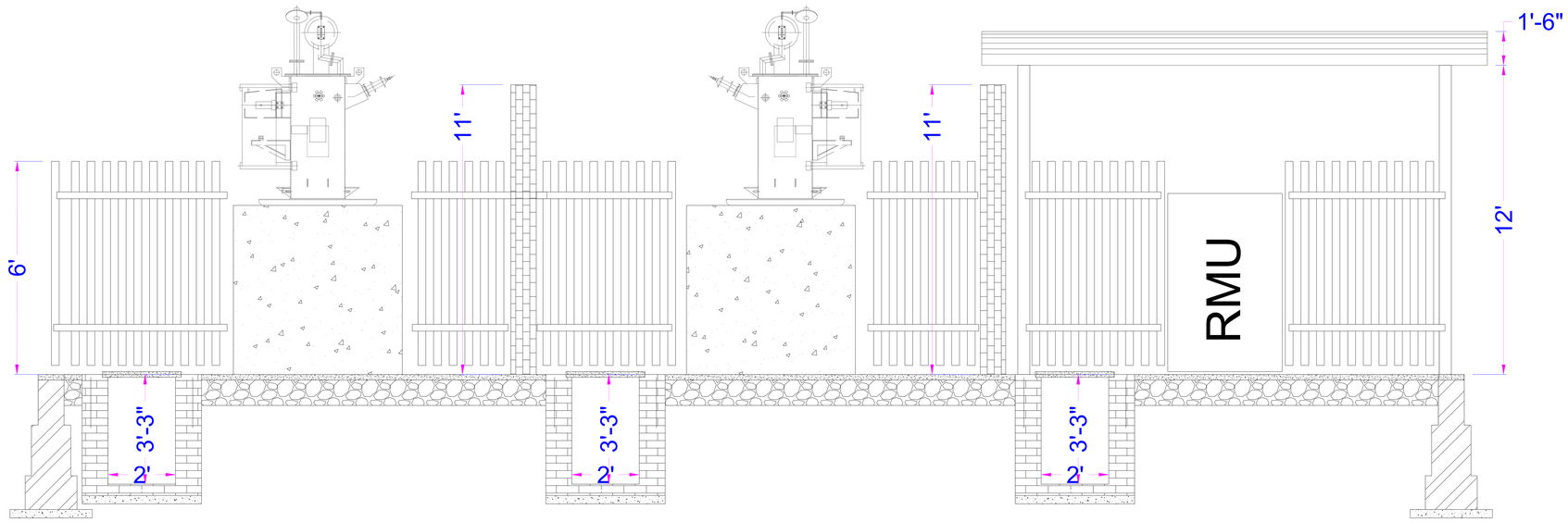

SECTION AT A-A'

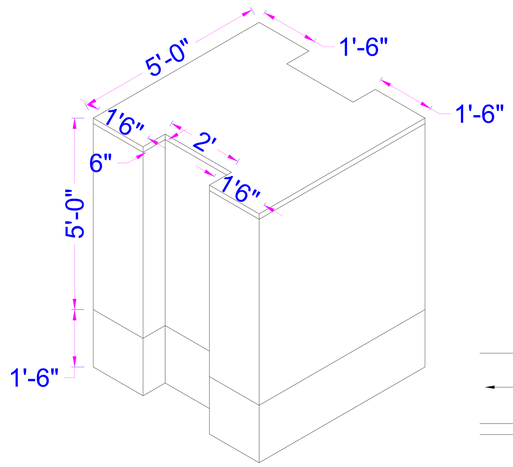

ISOMETRIC VIEW OF TR. PLINTH

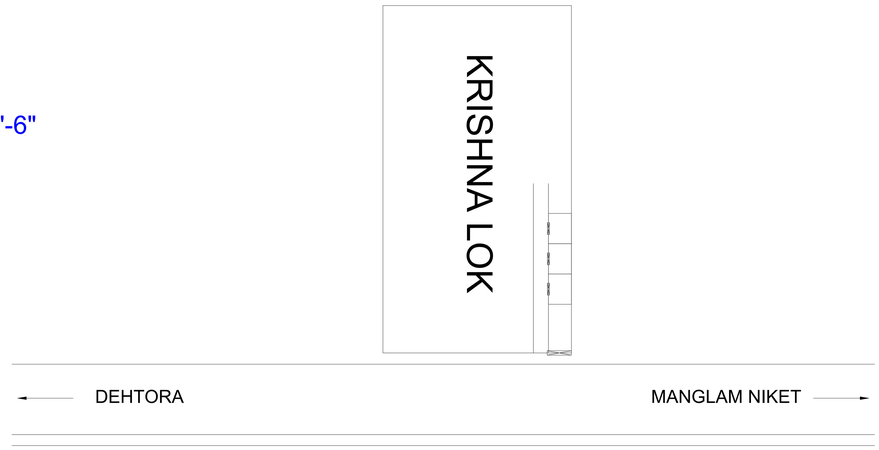

KEY PLAN

torrent POWER **TORRENT POWER LIMITED**

DRG NO.

TPL/AGRA/NP/18-19/03

Proposed Layout of 11kv s/s For KRISHNA LOK, Agra

DEEPAK KR. SHARMA	N.P	PANKAJ SIR	K.B SINGH	IN feet	03/02/2018
DRN BY	SECTION	CHECKED BY	APPROVED BY	DIMENSION	DATE