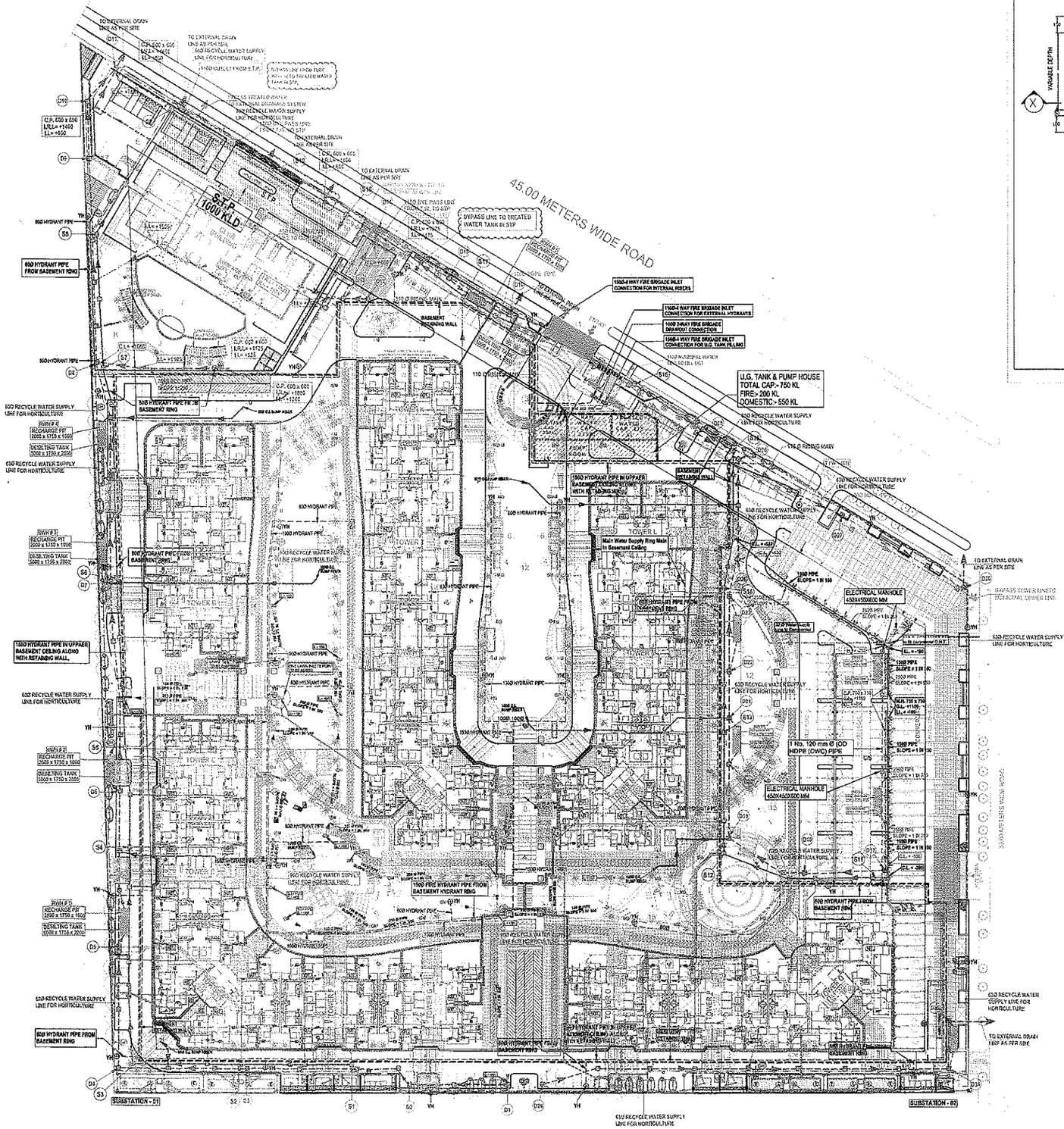

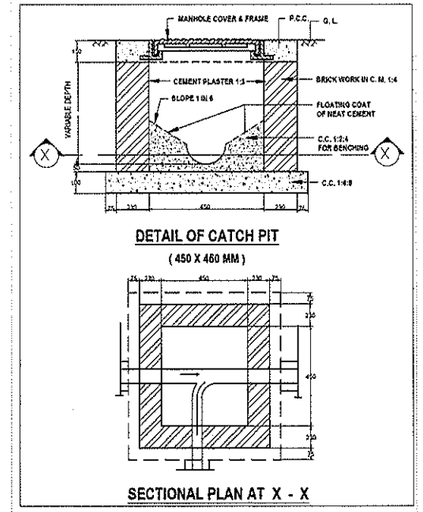

For Guishan Homes And Infrastructure Pvt. Ltd.

Authorised Signatory

LEGEND :

S. No.	SYMBOL	DESCRIPTION
1.	M.H.	MANHOLE
2.		SEWER LINE
3.	C.P.	CATCH PIT
4.		UNDER GROUND PIPE DRAIN
5.		RISING MAIN LINE (FROM TANK TO U.G.T.)
6.		MUNICIPAL WATER SUPPLY PIPE LINE
7.		RECYCLED WATER SUPPLY LINE FOR HORTICULTURE
8.		HIGH PRESSURE I.O.L. PIPE LINE
9.		LOW PRESSURE I.O.L. PIPE LINE
10.		PROPOSED TUBE WELL
11.		BASEMENT RETAINING WALL
12.	I.R.L. (+)1250	INTERNAL ROAD LEVEL
13.	GH	GARDEN HYDRANT
14.		RAIN WATER HARVESTING
15.	I.L. C.L.	INVERT LEVEL CONNECTION LEVEL
16.	L.I.	DRAINAGE CHAMBER 450 x 450 MM
17.		LANDSCAPE SURFACE DRAIN (AS PER LANDSCAPE CONSULTANT)
18.	F.L.	FORMATION LEVEL

LEGEND : FIRE SYSTEM

S. No.	SYMBOL	DESCRIPTION
1.		YARD HYDRANT LINE
2.	YH	YARD HYDRANT 63 M.M. DIA. SINGLE HEADED HYDRANT VALVE WITH 2 NOS. 15 M. LONG, 63 M.M. DIA. FIRE HOSE PIPE & 1 NO. BRANCH PIPE WITH NOZZLE
3.		FIRE BRIGADE CONNECTION
4.		BUTTERFLY VALVE
5.		NON RETURN VALVE (CHECK VALVE)
6.		ISOLATING VALVE WITH MASONARY CHAMBER

LEGEND : ELECTRICAL

S. No.	SYMBOL	DESCRIPTION
1.		120 mm Ø (OD HDPE (DWC) PIPE
2.		ELECTRICAL MANHOLE 450X450X600 MM

Project :
PROPOSED GULSHAN IKEBANA AT
PLOT NO- GH-03/A, SECTOR 143 , NOIDA .

Title :
LAYOUT PLAN

Subtitle :
SERVICES CO-ORDINATION PLAN

Drawing Released For :
- ☐ APPROVAL
- ☐ SUBMISSION
- ☐ ADVANCE COPY
- ☒ CONSTRUCTION

Drg. No : G.I. / ES - 04

Scale : 1: 600

Drawn By : SOM

Date : April 2014

Design By : Sanjay Goel

Ckd By : Anand Havelia

Architects :
DEEPAK MEHTA & ASSOCIATES
ARCHITECTS, PLANNERS, VALUERS, LANDSCAPE & INTERIORS
PLOT NO. 19 ABHISHEK PLAZA L.S.C. MAYUR VIHAR PH II DELHI 91
PH: 65272460 TELEFAX: 22770182

Services Consultant :
Consummate Engineering Services (P) Ltd.
Noida Office : B - 67, Sector - 67, Noida - 201 301
Tel : (0120) 2593600 (30 Lines)
Lko. Office : R 006, Rohtas Plumaria, Gomti Nagar, Lucknow
Tel : (0522) 6515486
e-mail : mail@cespl.in, website : www.cespl.in