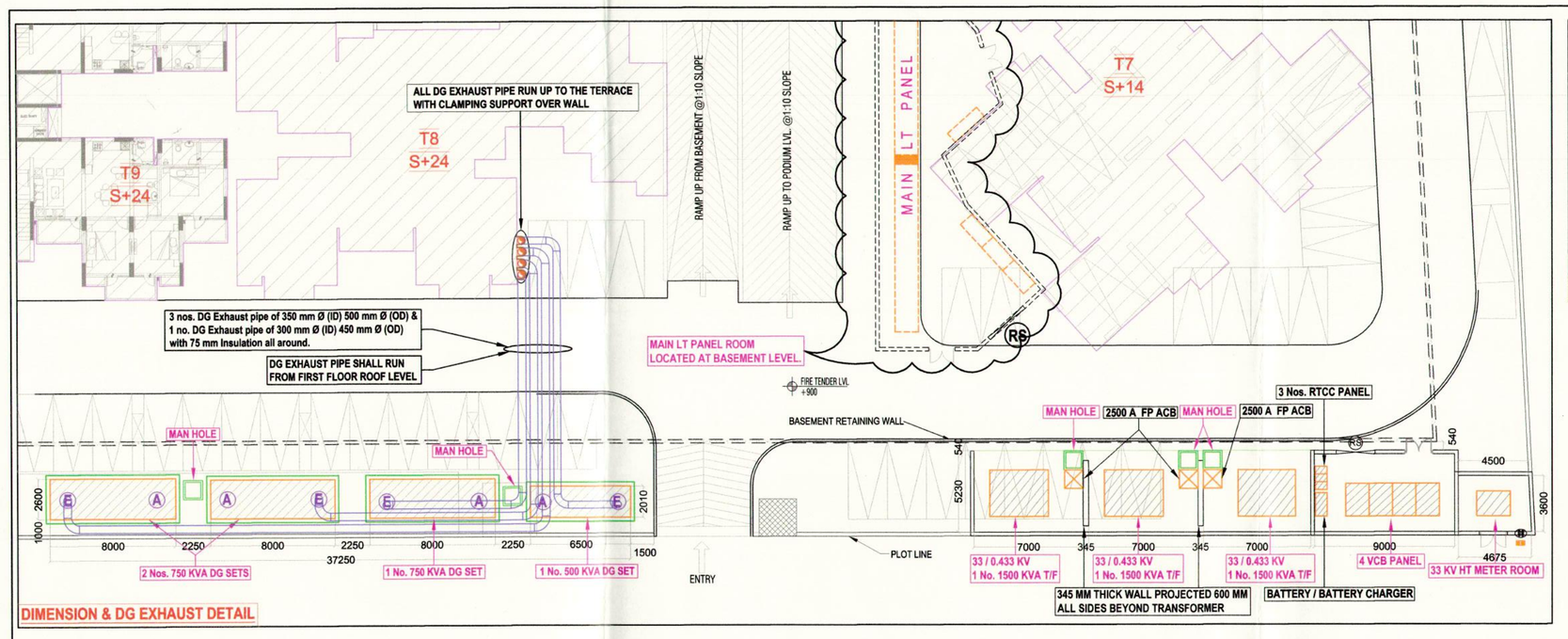

DIMENSION & DG EXHAUST DETAIL

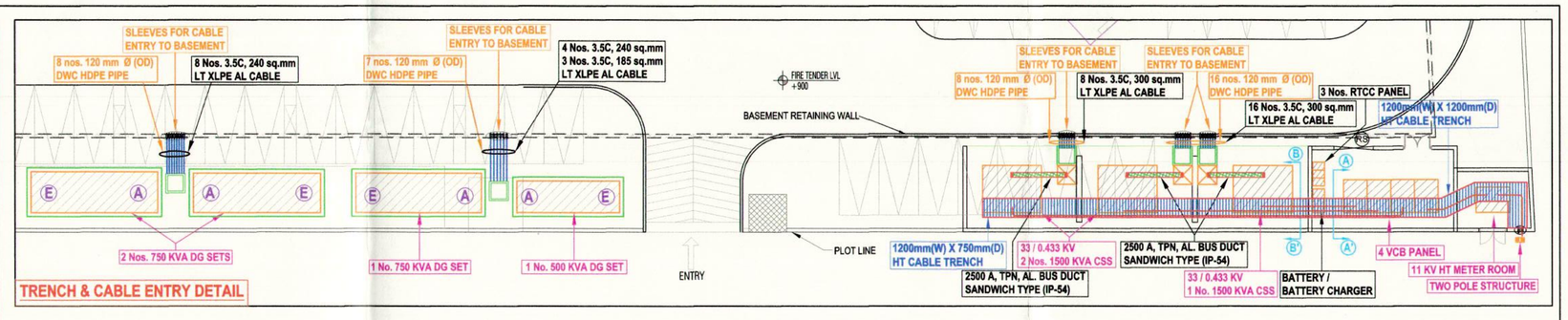

TRENCH & CABLE ENTRY DETAIL

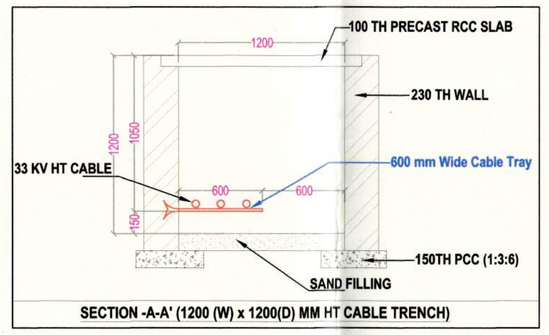

SECTION -A-A' (1200 (W) x 1200(D) MM HT CABLE TRENCH)

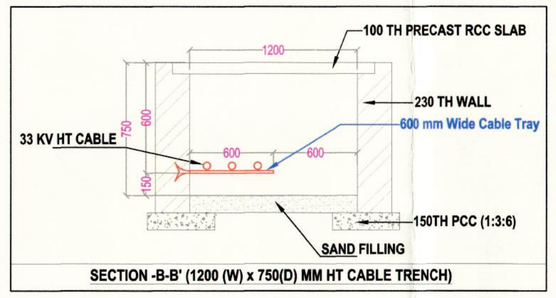

SECTION -B-B' (1200 (W) x 750(D) MM HT CABLE TRENCH)

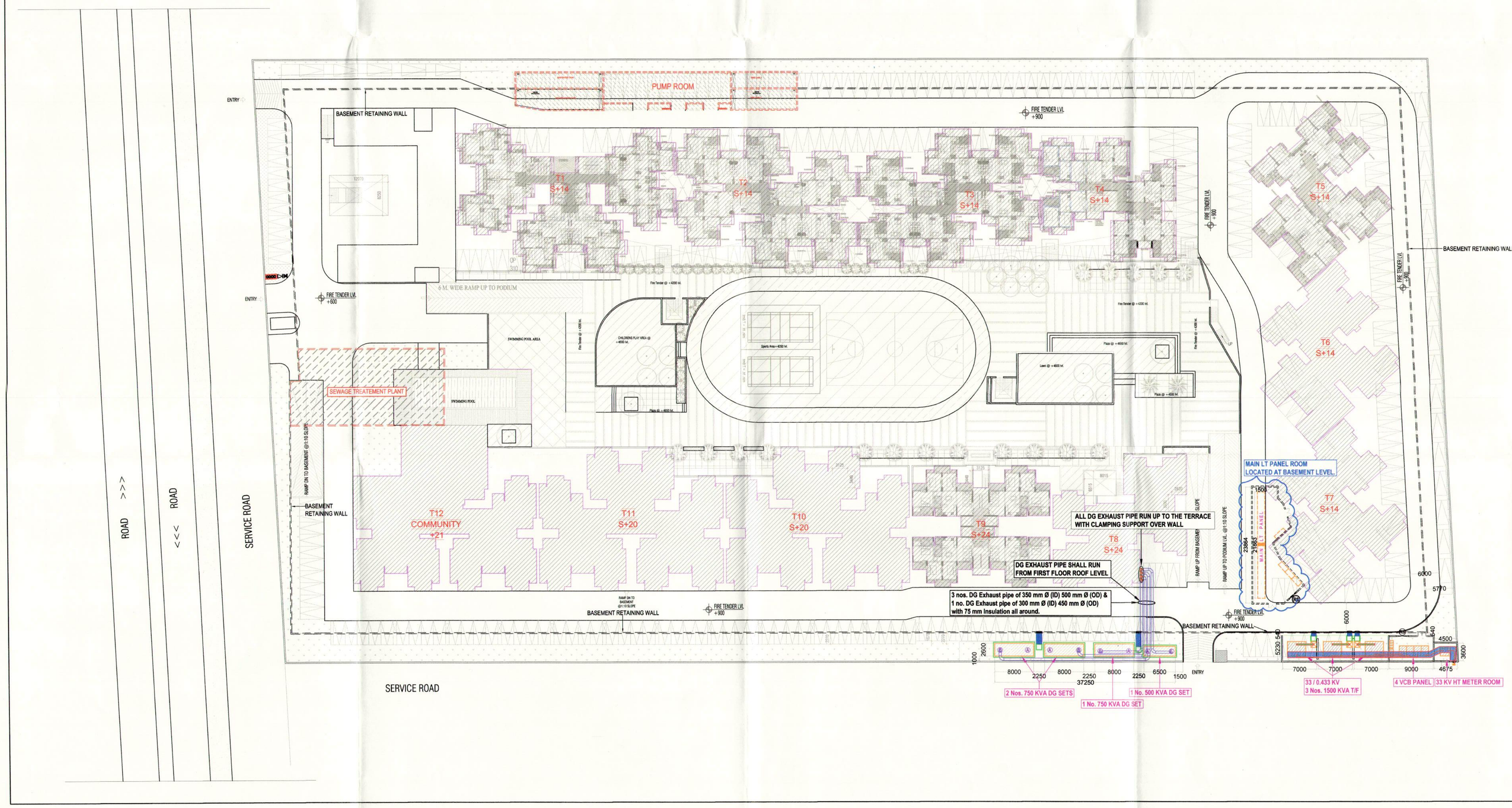

NOTE : -
CLEAR HEIGHT OF ROLLING SHUTTER = 3000 MM (MIN) FROM FFL.

IMPORTANT NOTES :

1. TRANSFORMER & DG SETS FOUNDATION SHALL BE GIVEN BY VENDOR.
2. VCB PANEL SIZE SHALL BE GOT APPROVED FROM CONSULTANT BEFORE PLACEMENT OF ORDER.
3. EXACT LOCATION OF CABLE TRENCH SHALL BE FINALIZE AFTER GETTING THE DETAIL OF GLAND PLATE IN HT PANEL.

rev. no.	date	revision
R3	06.08.2015	11 KV SUBSTATION CONVERT INTO 33 KV SUBSTATION.
R2	04.07.2015	DG SETS CONFIGURATION REVISED.
R1	18.09.2014	LT PANEL ROOM LOCATION REVISED.
R0	15.04.2014	GFC ISSUED.

project
PANCHSHEEL HYNISH
AT PLOT NO- GH-08 A, SECTOR-1, GREATER NOIDA.

title
ELECTRICAL DRAWING

subtitle
SETTING-OUT LAYOUT
AT SITE PLAN

drawing released for
- [x] APPROVAL
- [ ] SUBMISSION
- [ ] ADVANCE COPY
- [ ] CONSTRUCTION

drg. no. PH / ELEC / EXT. / 01	drawn by Najmul
scale 1 : 475 @ A1	designed by Ateeq Ur Rehman
date March 2013	checked by Anand Havelia

architects
OASIS DESIGNS INCORPORATED
ARCHITECTS.LANDSCAPE ARCHITECTS & ENVIRONMENTAL CONSULTANTS
3172, SEC-A, PKT-B, VASANT KUNJ, NEW DELHI-70
PH: 26122440, 26122044 FAX - 26123250
EMAIL : design.oasis@gmail.com

Goods for Construction
Issued on: 11 01 2016

services consultant
Consummate Engineering Services (P) Ltd.
cespl
Noida Office : B - 67, Sector - 67, Noida - 201 301
Tel : (0120) 2593500 (30 Lines)
Lko. Office : R 606, Rohtas Plumeria, Gomti Nagar, Lucknow
Tel : (0522) 6515455
e mail : mail@cespl.in, website : www.cespl.in

13/1/16 13-01-16