PRODUCED BY AN AUTODESK EDUCATIONAL PRODUCT

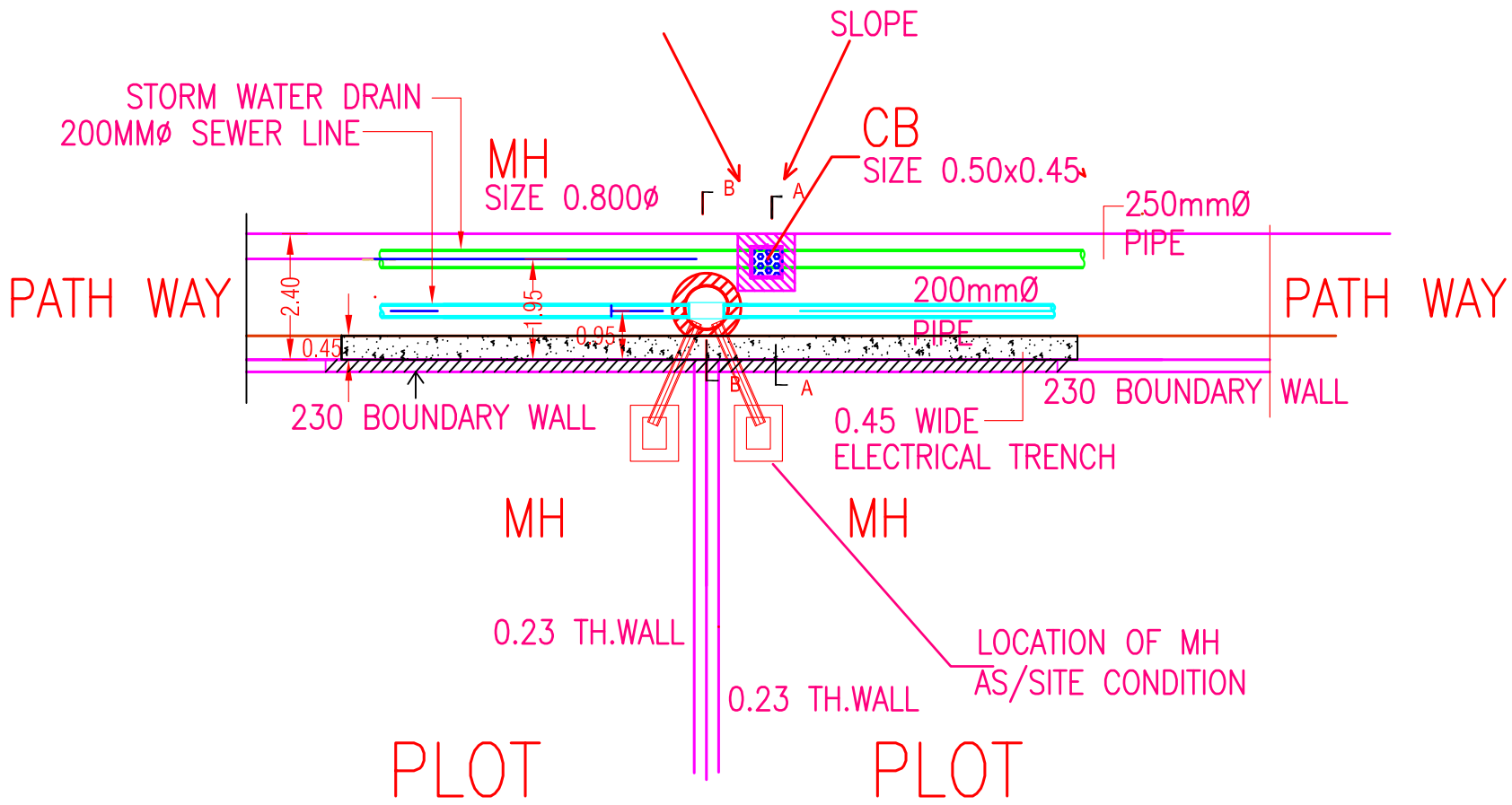

PLAN

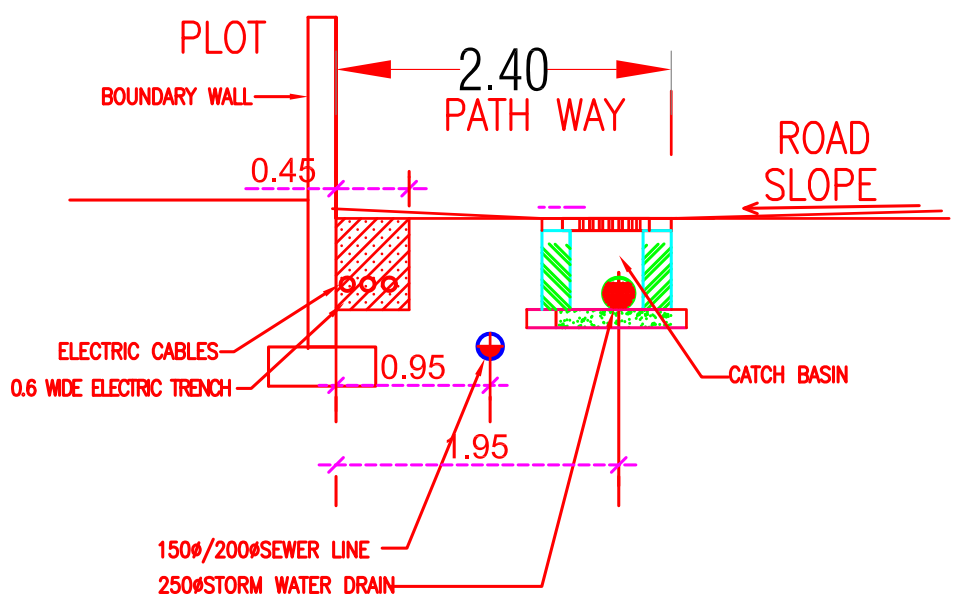

SECTION A-A

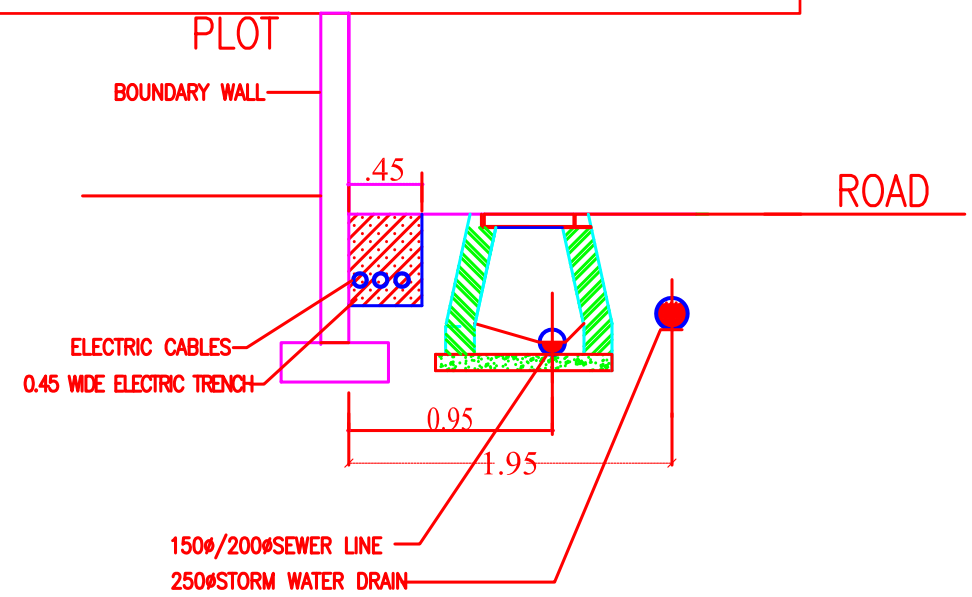

SECTION B-B

PROPOSED LAYOUT "RESIDENCY"

REVISIONS

REVISIONS NO	DATE	REVISIONS NO	DATE
01		05	
02		05	
03			
04			

DRG. TITLE.

PLUMBING DETAIED PLAN & SECTION

PLUMBING & FIRE FIGHTING CONSULTANT

SANORIA
DELHI
MOB: 9999535839

ORIENTATION

N

R. K. MALIK & ASSOCIATES
ARCHITECT - ENGINEER
INTERIOR - EXTERIOR
ENVIROMENTAL CONSULTANT
6, AVAS VIKAS MARKET,
CIVIL LINES, PILI KOTHI, MORADABAD
PHONE : 2416764

PRODUCED BY AN AUTODESK EDUCATIONAL PRODUCT
PRODUCED BY AN AUTODESK EDUCATIONAL PRODUCT
PRODUCED BY AN AUTODESK EDUCATIONAL PRODUCT