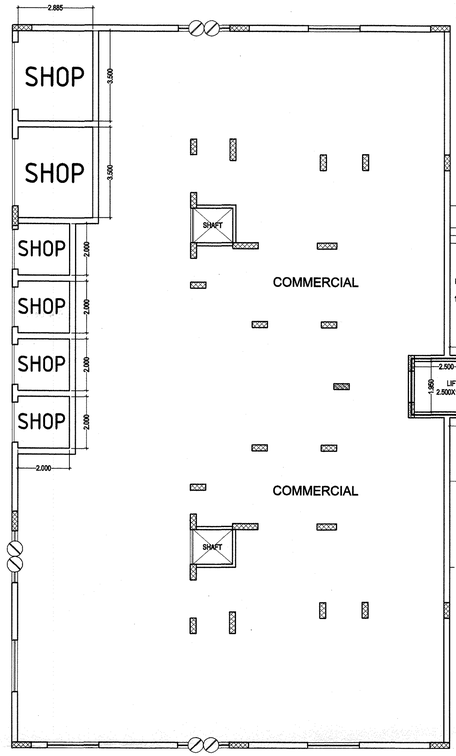

GROUND FLOOR PLAN

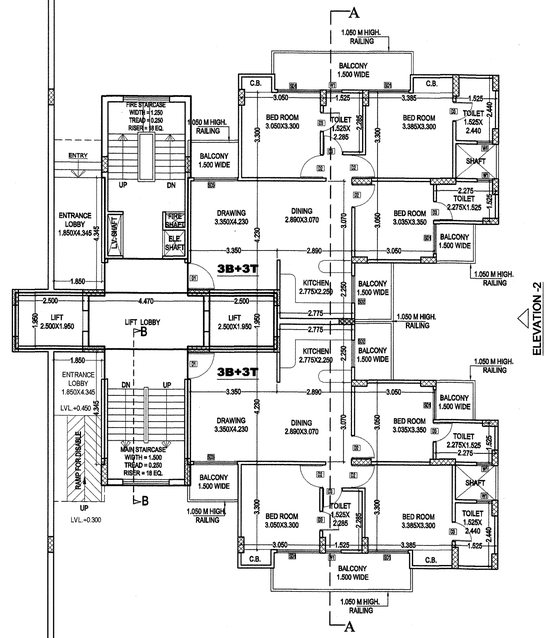

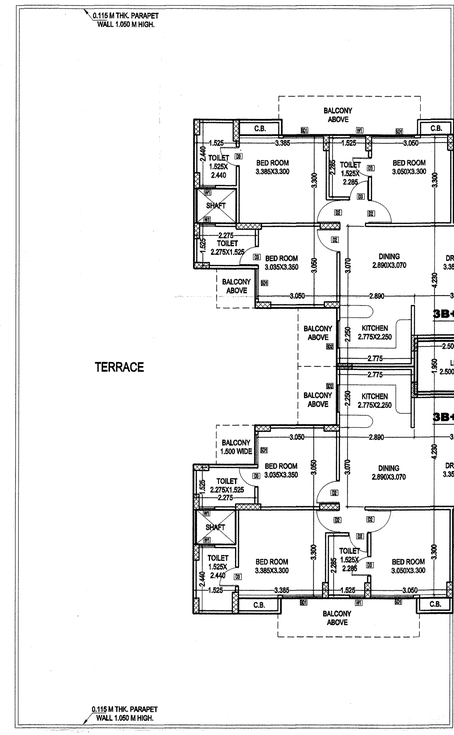

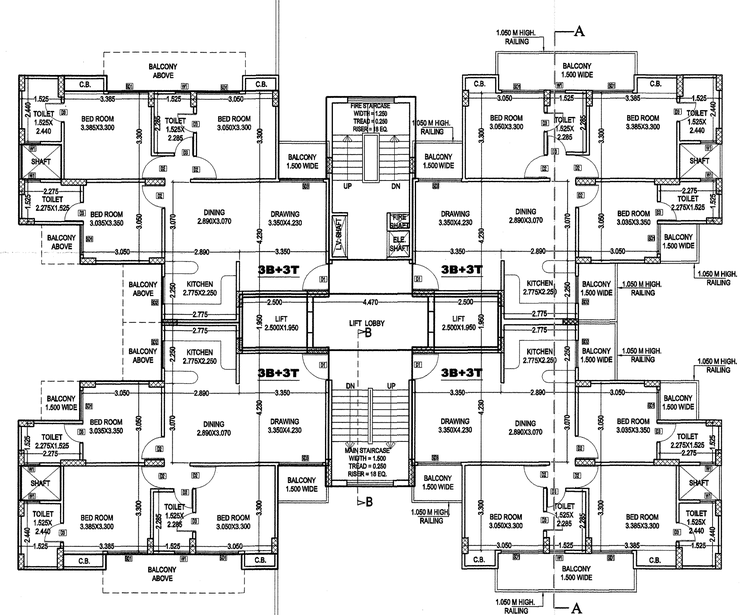

FIRST FLOOR PLAN

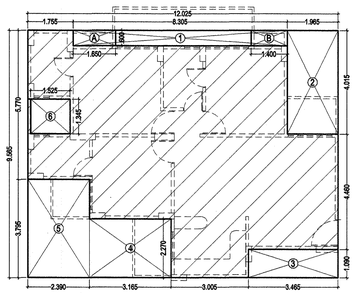

3B+3T

3B+3T					
UNIT AREA = (12.025x 9.565) = 115.019 - 34.955 (LESS AREA) = 80.064 SQ.MT.					
S.NO	LENGTH		WIDTH		LESS AREA (SQ.MT.)
1	8.305	x	0.600	=	4.983
2	1.965	x	4.015	=	7.889
3	3.465	x	1.090	=	3.777
4	3.165	x	2.270	=	7.185
5	2.390	x	3.795	=	9.070
6	1.525	x	1.345	=	2.051
TOTAL				=	34.955
CUP-BOARD AREA CALCULATION (Not include in F.A.R)					
A	1.650	x	0.600	=	0.990
B	1.400	x	0.600	=	0.840
TOTAL				=	1.830

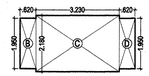

LOBBY AREA DIAGRAM

(MAX. 10 SQ.MT. ALLOWED)

LIFT LOBBY AREA (SQ.MT.)					
SNO.	LENGTH		WIDTH		AREA (SQ.MT.)
B	0.620	x	1.950	=	1.209
C	3.230	x	2.180	=	7.041
D	0.620	x	1.950	=	1.209
TOTAL				=	9.459

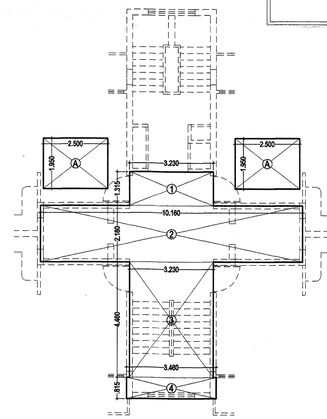

CIRCULATION AREA CALCULATION

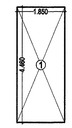

ENTRANCE LOBBY AREA DIAGRAM

ENTRANCE LOBBY AREA					
S.NO	WIDTH		LENGTH		AREA (SQ.MT.)
1	1.850	x	4.460	=	8.251
TOTAL ENT. LOBBY AREA				=	8.251

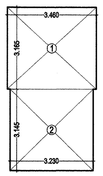

FIRE STAIRCASE AREA DIAGRAM

FIRE STAIR AREA (SQ.MT.)					
SNO.	LENGTH		WIDTH		AREA (SQ.MT.)
1	3.460	x	3.165	=	10.951
2	3.230	x	3.145	=	10.158
TOTAL				=	21.109

GROUND FL. AREA = TYPICAL CORE AREA + {AX2) = 24.413 + {(2.500x1.950)+(2.500X1.950)} = 34.163 SQ.MT.
TYPICAL CORE AREA = TOTAL AREA - {2X+B+C+D) = 43.622 - [(2.500x1.950)+(2.500X1.950) +9.495 = 24.413 SQ.MT.

S.NO	LENGTH		WIDTH		AREA (SQ.MT.)
1	3.230	x	1.315	=	4.247
2	10.160	x	2.180	=	22.149
3	3.230	x	4.460	=	14.406
4	3.460	x	0.815	=	2.820
TOTAL CORE AREA				=	43.622

GROUND COVERAGE AREA DETAIL = [COMMERCIAL+ENT.LOBBY + {(3B+3T+C.B.)x2) + TOTAL CORE AREA + FIRE STAIR]
(467.279 +8.251+ 163.788 + 43.622 + 21.109) = 704.049 SQ.MT.

TOWER-H					
CALCULATION OF COMMERCIAL-1					
S.NO	WIDTH		LENGTH		AREA (SQ.MT.)
1	7.025	x	27.970	=	196.489
2	9.945	x	7.070	=	70.311
3	8.420	x	5.805	=	48.878
4	6.920	x	2.180	=	15.086
5	1.525	x	11.100	=	16.928
6	8.420	x	5.805	=	48.878
7	9.945	x	7.110	=	70.709
TOTAL COMMERCIAL AREA				=	467.279

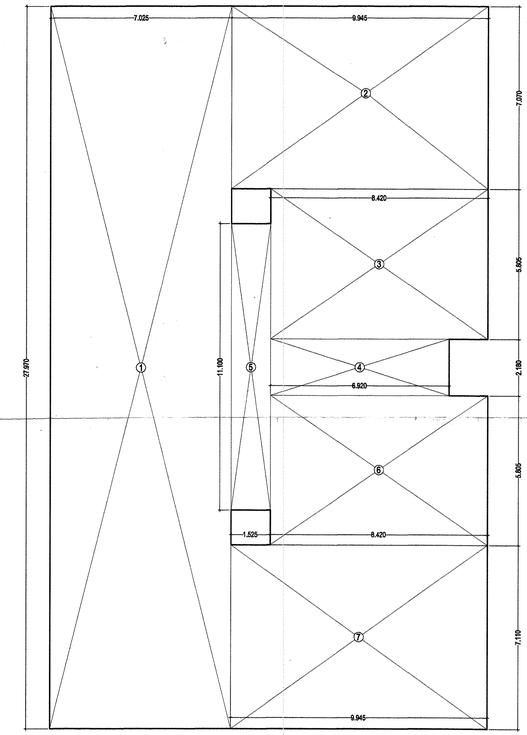

COMMERCIAL-1 AREA CALCULATION

(TOWER-H) S-18

GR./COMMERCIAL, FIRST FLOOR PLAN & AREA CHART

DOORS & WINDOWS SCHEDULE				
S.NO.	TYPE	SIZE	S.LVL.	L.LVL.
1	D1	1.050x2.100	±00	2.100
2	D2	0.900x2.100	±00	2.100
3	D3	0.750x2.100	±00	2.100
4	D4	0.635x2.100	±00	2.100
5	D5	1.000x2.100	±00	2.100
6	SD1	1.600x2.500	±00/+0.450	2.500
7	SD2	1.240x2.500	±00/+1.050	2.500
8	SD3	1.800x2.500	±00/+0.450	2.500
9	SD4	1.510x2.500	±00/+0.450	2.500
10	DW5	1.165x2.500	±00/+1.050	2.500
11	SD6	2.100x2.500	±00/+0.450	2.500
12	W1	0.600x1.450	+1.050	2.500
13	W2	0.900x1.450	+1.050	2.500
14	W3	0.915x1.600	+0.900	2.500
15	W4	0.665x1.600	+0.900	2.500
16	W5	0.650x1.600	+0.900	2.500

Map for proposed building is as per Bye Laws submitted for approval Please.

Pl. Asstt. Asstt. Arch Architect

PROJECT TITLE :

REVISED GROUP HOUSING AT PLOT NO.GH-17, SEC- 75,NOIDA. FOR - M/S MAXBLIS CONSTRUCTION PVT. LTD.

DRAWING TITLE:-

GR./COMMERCIAL, FIRST FLOOR PLAN & AREA CHART TOWER-H (S/C+19)

S-18

DRG NO.

SCALE	1:150
DATE	2013/03/04
DEALT	
JOB NO.	V:\Comp\12-13\DM JV\T-75 GARDENIA\ENGINEER\S_SUBMISSION\12039023_SUBMISSION

DEEPAK MEHTA & ASSOCIATES

ARCHITECTS, PLANNERS, VALUERS, LANDSCAPE & INTERIORS
PLOT NO. 16 ABHISHEK PLAZA L.S.C. MAYUR VIHAR PH II DELHI 91
PH: 65272180 TELEFAX: 22770100

Architect Deepak Mehta
COA/A/16840
Plot No. 16 Abhishek Plaza LSC
Mayur Vihar Ph-II, Delhi-91

ARCHITECT'S SIGN

For MAXBLIS CONSTRUCTION PVT. LTD.

Authorised Signatory

OWNER'S SIGN