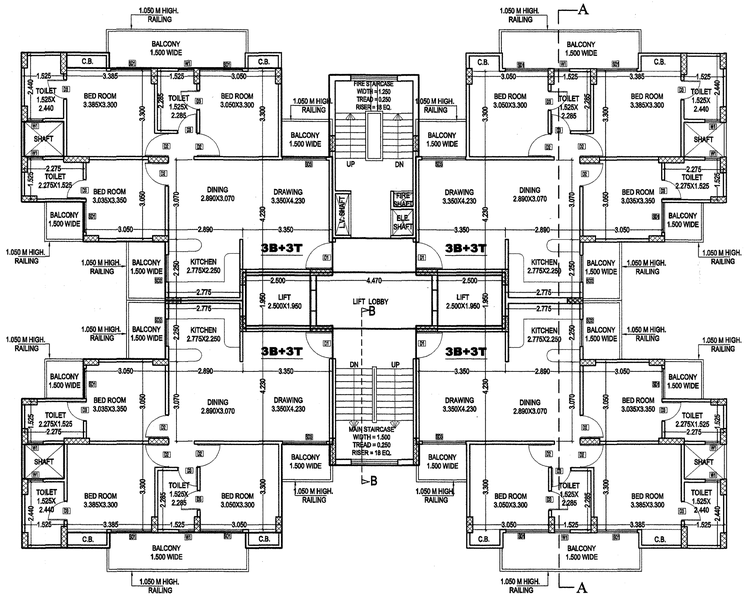

TYPICAL FLOOR PLAN (2nd to 13th)

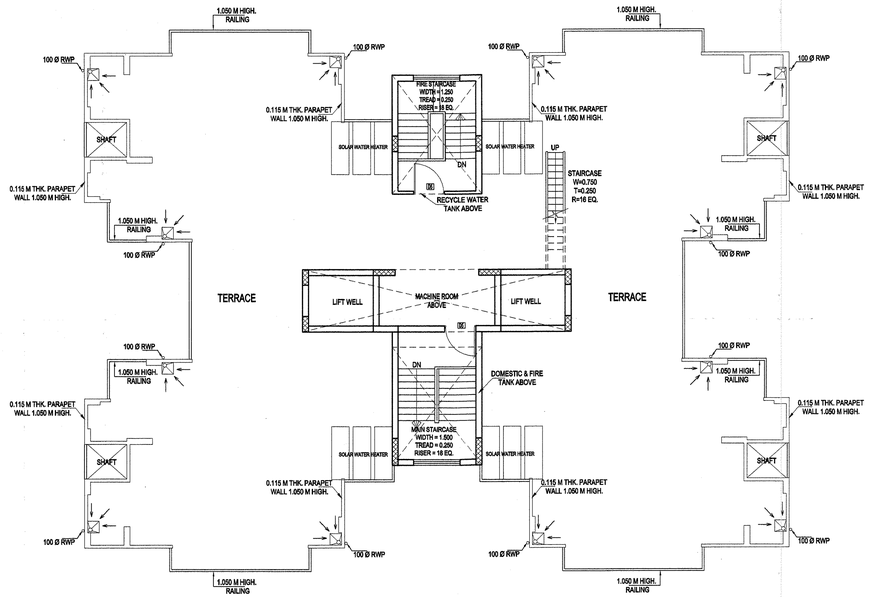

TERRACE PLAN

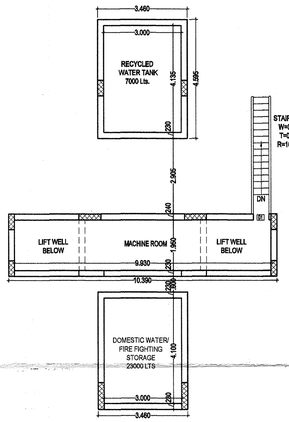

MACHINE ROOM & OVER HEAD WATER TANK

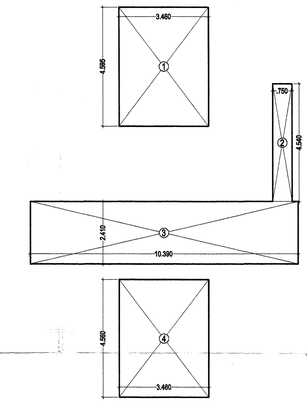

MACHINE ROOM & MUMTY AREA DIAGRAM

MACHINE RM. & MUMTY AREA					
SNO.	LENGTH		WIDTH		AREA (SQ.MT.)
1	3.460	x	4.595	=	15.899
2	0.750	x	4.540	=	3.405
3	10.390	x	2.410	=	25.040
4	3.460	x	4.560	=	15.778
TOTAL				=	60.121

TOWER H

	3B+3T	3B+3T	3B+3T	3B+3T		Entrance Lobby area	Commer-cial	Core area	Total FAR	Cupboard Area per floor	Ground Coverage	Fire stair (Non FAR)	Stilt	M/R, mumty (Non FAR)	Actual Lobby area (FOR REFF.)	Lobby area Ancillary area	LIFT SHAFT Ancillary area		Ancillary area	Nos. of units
	1	2	3	4	5	6	7	8	9	10	11	12	13	14		15	16	17	18	19
									(1 to 8)		9+10+12+13 +15+16+17								10+12+14+1 5+16+17	
Area details	80.064	80.064	80.064	80.064		8.251	467.279	34.163		7.320	704.049	21.109	0.000	60.121	9.459	9.459	9.750			
Ground / Stilt Floor	80.064	80.064				8.251	467.279	34.163	669.821	3.660	704.049	21.109	0.000		9.459	9.459			34.228	2
First Floor	80.064	80.064	80.064	80.064				24.413	344.669	7.320		21.109			9.459	9.459	9.750		47.638	4
Second Floor	80.064	80.064	80.064	80.064				24.413	344.669	7.320		21.109			9.459	9.459	9.750		47.638	4
Third Floor	80.064	80.064	80.064	80.064				24.413	344.669	7.320		21.109			9.459	9.459	9.750		47.638	4
Fourth Floor	80.064	80.064	80.064	80.064				24.413	344.669	7.320		21.109			9.459	9.459	9.750		47.638	4
Fifth Floor	80.064	80.064	80.064	80.064				24.413	344.669	7.320		21.109			9.459	9.459	9.750		47.638	4
Sixth Floor	80.064	80.064	80.064	80.064				24.413	344.669	7.320		21.109			9.459	9.459	9.750		47.638	4
Seventh Floor	80.064	80.064	80.064	80.064				24.413	344.669	7.320		21.109			9.459	9.459	9.750		47.638	4
Eighth Floor	80.064	80.064	80.064	80.064				24.413	344.669	7.320		21.109			9.459	9.459	9.750		47.638	4
Ninth Floor	80.064	80.064	80.064	80.064				24.413	344.669	7.320		21.109			9.459	9.459	9.750		47.638	4
Tenth Floor	80.064	80.064	80.064	80.064				24.413	344.669	7.320		21.109			9.459	9.459	9.750		47.638	4
Eleventh Floor	80.064	80.064	80.064	80.064				24.413	344.669	7.320		21.109			9.459	9.459	9.750		47.638	4
Twelth Floor	80.064	80.064	80.064	80.064				24.413	344.669	7.320		21.109			9.459	9.459	9.750		47.638	4
Thirteenth Floor	80.064	80.064	80.064	80.064				24.413	344.669	7.320		21.109			9.459	9.459	9.750		47.638	4
M/R, mumty														60.121					60.121	
Total									5150.518		704.049		0.000						713.643	54

(TOWER- H)

S-19

TYPICAL ,TERRACE FLOOR PLAN & AREA CHART could be demolished also. Floor ... construct building

DOORS & WINDOWS SCHEDULE

S.NO.	TYPE	SIZE	S.LVL.	L.LVL.
1	D1	1.050x2.100	±00	2.100
2	D2	0.900x2.100	±00	2.100
3	D3	0.750x2.100	±00	2.100
4	D4	0.675x2.100	±00	2.100
5	D5	1.000x2.100	±00	2.100
6	SD1	1.800x2.500	±00/+0.450	2.500
7	SD2	1.240x2.500	±00/+1.050	2.500
8	SD3	1.800x2.500	±00/+0.450	2.500
9	SD4	1.510x2.500	±00/+0.450	2.500
10	DW5	1.165x2.500	±00/+1.050	2.500
11	SD6	2.100x2.500	±00/+0.450	2.500
12	W1	0.600x1.450	+1.050	2.500
13	W2	0.900x1.450	+1.050	2.500
14	W3	0.915x1.500	+0.900	2.500
15	W4	0.885x1.500	+0.900	2.500
16	W5	0.650x1.500	+0.900	2.500

Map for proposed Building is as per Bye Laws submitted for approval Please.

Pl. Asstt. Asstt. Arch Architect

PROJECT TITLE :

REVISED GROUP HOUSING AT PLOT NO.GH-17, SEC- 75,NOIDA. FOR - M/S MAXBLIS CONSTRUCTION PVT. LTD.

DRAWING TITLE:-

TYPICAL,TERRACE FLOOR PLAN & AREA CHART TOWER - H (G/C+13)

S-19

DRG NO.

SCALE	1:100
DATE	20130304
DEALT	
JOB NO.	\\Comp12\D\DATA\97-75,GARDENIA\20130223_SUBMISSION \20130223_SUBMISSION

DEEPAK MEHTA & ASSOCIATES
ARCHITECTS, PLANNERS, VALUERS, LANDSCAPE & INTERIORS
PLOT NO. 16 ABHISHEK PLAZA L.S.C. MAYUR VIHAR PH II DELHI 91
PH: 65272180 TELEFAX: 22770180

Architect Deepak Mehta
Reg. No. A/10840
Plot No. 16 Abhishek Plaza LSC
Mayur Vihar Ph-II, Delhi-91

ARCHITECT'S SIGN

For MAXBLIS CONSTRUCTION PVT. LTD.

Authorised Signatory

OWNER'S SIGN